TRIDONIC

ACL LINEAR LENS 24mm

Linear accessories

ACL LINEAR LENS 24mm 60°

ACL LINEAR LENS 24mm 90°

ACL LINEAR LENS 24mm INTENSE

Product description LINEAR LENS

- Linear lens for LLE 20 / 24
- Available with different beam characteristics
- Protection against direct touch for non-SELV applications (recommendation: use all fixing points)
- Fast snap on mounting on to LLE 20: with M4 screws and plastic washers, to LLE 24: with clips or plastic washers
- Recommendation: Fastening with screws and plastic washers, see 2.3 Heat sink specifications in data sheet
- Material: PMMA
- Available lengths: 1,200, 1,500 and 1,800 mm, Tolerance: + 10 mm (ends raw)
- Max. permissible temperature 80 °C
- Photometric data available on website

Product description Endcap

- ENDCAP for LINEAR LENS 24mm INTENSE, ASY and DASY
- Mounting by clipping in and screwing from below using screw EJOT Delta PT WN 5451 20x4, tightening torque 0.7 Nm
- Made of Polyamide UL94 V0

Website

http://www.tridonic.com/28001428

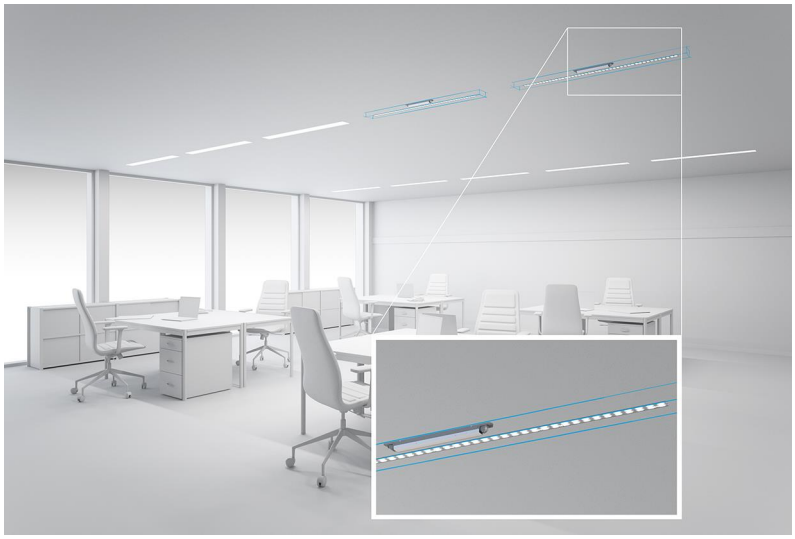

TRIDONIC

ACL LINEAR LENS 24mm

Linear accessories

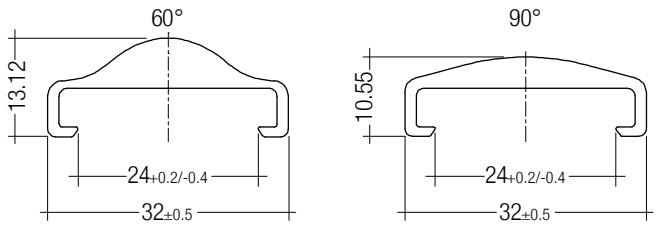

ACL LINEAR LENS 24mm 60° and 90°

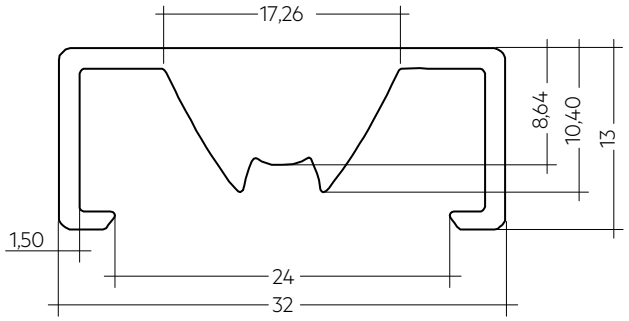

ACL LINEAR LENS 24mm INTENSE

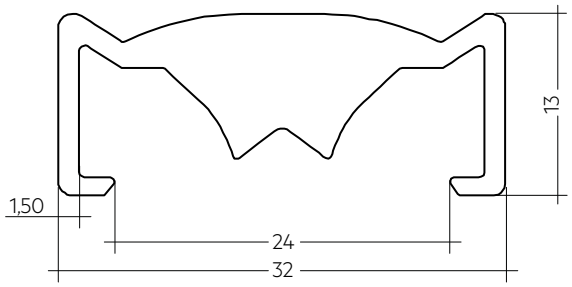

ACL LINEAR LENS 24mm BATWING (only for LLE 24)

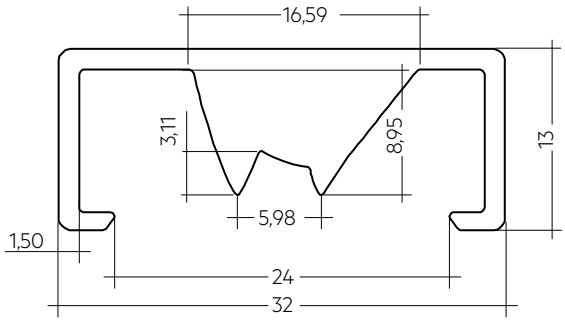

ACL LINEAR LENS 24mm ASY

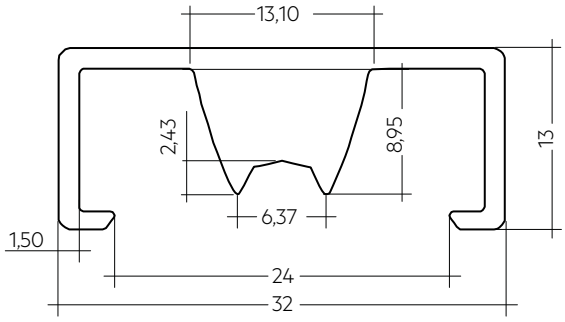

ACL LINEAR LENS 24mm DASY

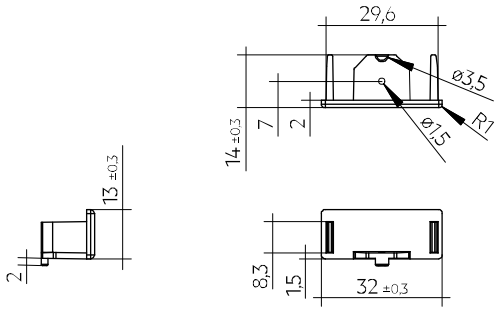

ACL Endcap LENS 24mm PSF

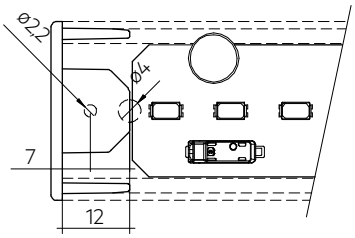

ACL Endcap LENS 24mm PSF

Ordering data

Type	Article number	Length L	Beam characteristic	Efficiency	Packaging, carton	Weight per pc.
ACL LINEAR LENS 24x1200mm 60°	**28001428**	1,200 mm	60°	97 %	21 pc(s).	0.196 kg
ACL LINEAR LENS 24x1200mm 90°	**28001429**	1,200 mm	90°	97 %	21 pc(s).	0.165 kg
ACL LINEAR LENS 24x1500mm 60°	**28000953**	1,500 mm	60°	97 %	21 pc(s).	0.261 kg
ACL LINEAR LENS 24x1500mm 90°	**28000955**	1,500 mm	90°	97 %	21 pc(s).	0.221 kg
ACL LINEAR LENS 24x1200mm INTENSE	**28002024**	1,200 mm	40°	95 %	18 pc(s).	0.261 kg
ACL LINEAR LENS 24x1500mm INTENSE	**28002025**	1,500 mm	40°	95 %	18 pc(s).	0.326 kg
ACL LINEAR LENS 24x1800mm INTENSE	**28002026**	1,800 mm	40°	95 %	18 pc(s).	0.392 kg
ACL LINEAR LENS 24x1200mm BATWING	**28002027**	1,200 mm	batwing	95 %	18 pc(s).	0.275 kg
ACL LINEAR LENS 24x1500mm BATWING	**28002028**	1,500 mm	batwing	95 %	18 pc(s).	0.344 kg
ACL LINEAR LENS 24x1800mm BATWING	**28002029**	1,800 mm	batwing	95 %	18 pc(s).	0.412 kg
ACL LINEAR LENS 24x1200mm ASY	**28002030**	1,200 mm	asymmetric	95 %	18 pc(s).	0.250 kg
ACL LINEAR LENS 24x1500mm ASY	**28002031**	1,500 mm	asymmetric	95 %	18 pc(s).	0.312 kg
ACL LINEAR LENS 24x1800mm ASY	**28002032**	1,800 mm	asymmetric	95 %	18 pc(s).	0.375 kg
ACL LINEAR LENS 24x1200mm DASY	**28002033**	1,200 mm	double asymmetric	92 %	18 pc(s).	0.249 kg
ACL LINEAR LENS 24x1500mm DASY	**28002034**	1,500 mm	double asymmetric	92 %	18 pc(s).	0.311 kg
ACL LINEAR LENS 24x1800mm DASY	**28002035**	1,800 mm	double asymmetric	92 %	18 pc(s).	0.373 kg
ACL Endcap LENS 24mm PSF	**28002669**	–	–	–	3,600 pc(s).	0.003 kg

1. Photometric charcteristics

1.1 Light distribution for ACL LINEAR LENS 24mm INTENSE

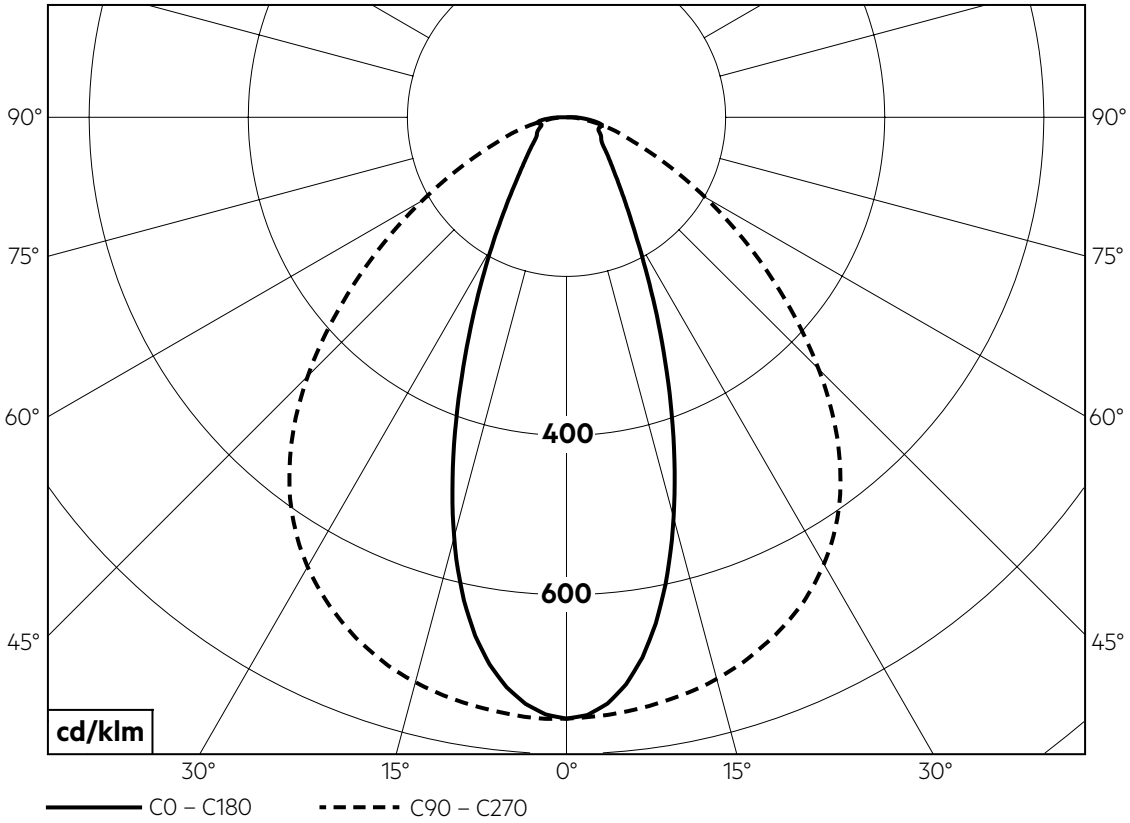

1.2 Light distribution for ACL LINEAR LENS 24mm BATWING

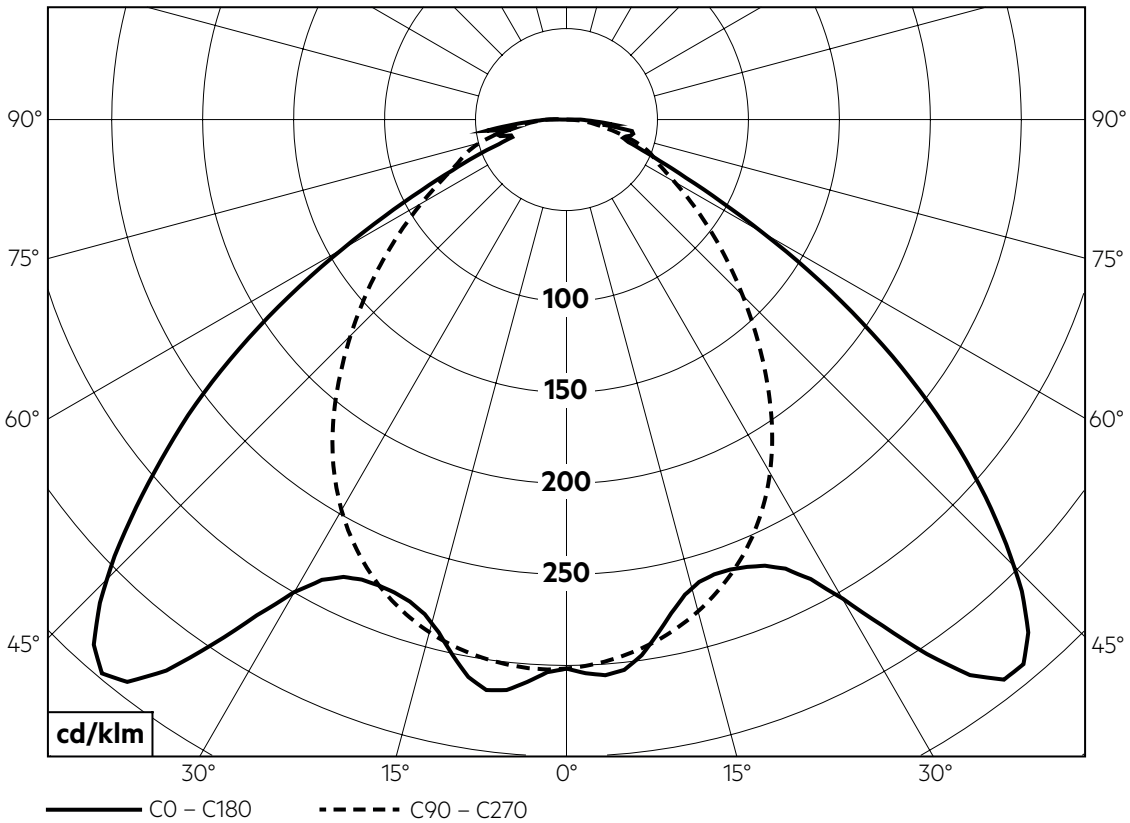

1.3 Light distribution for ACL LINEAR LENS 24mm ASY

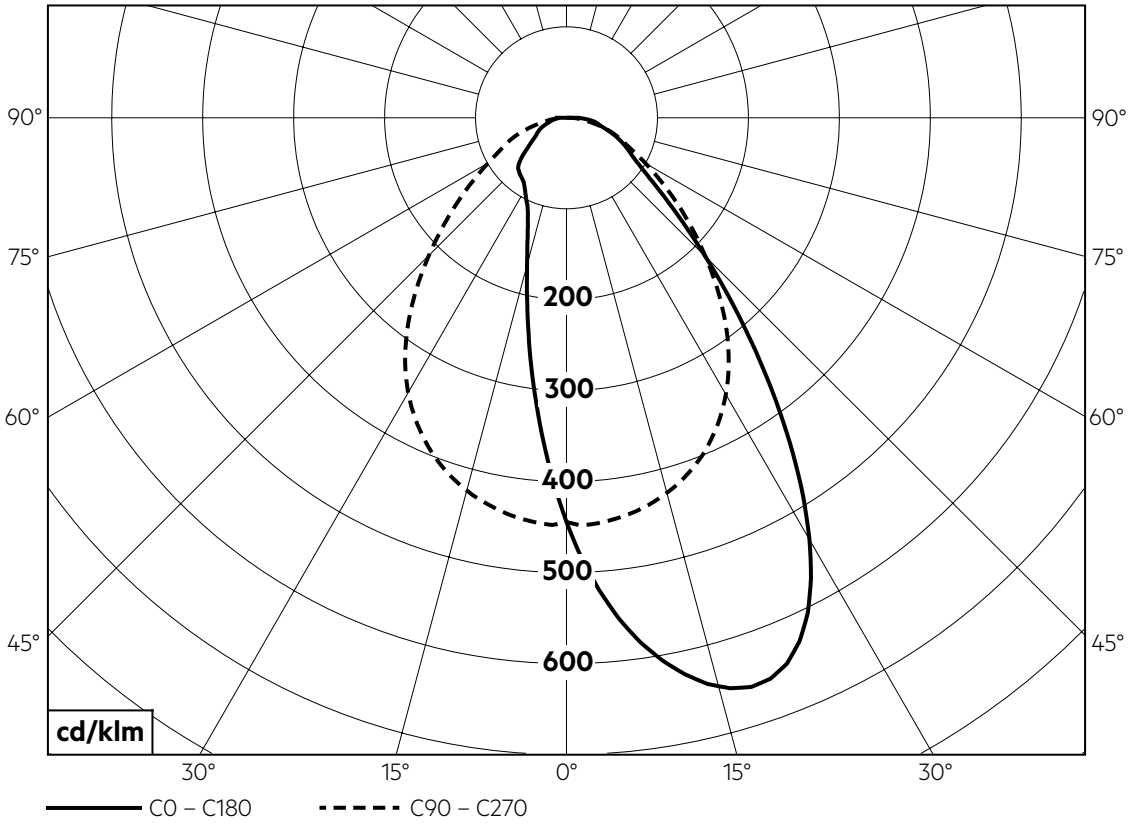
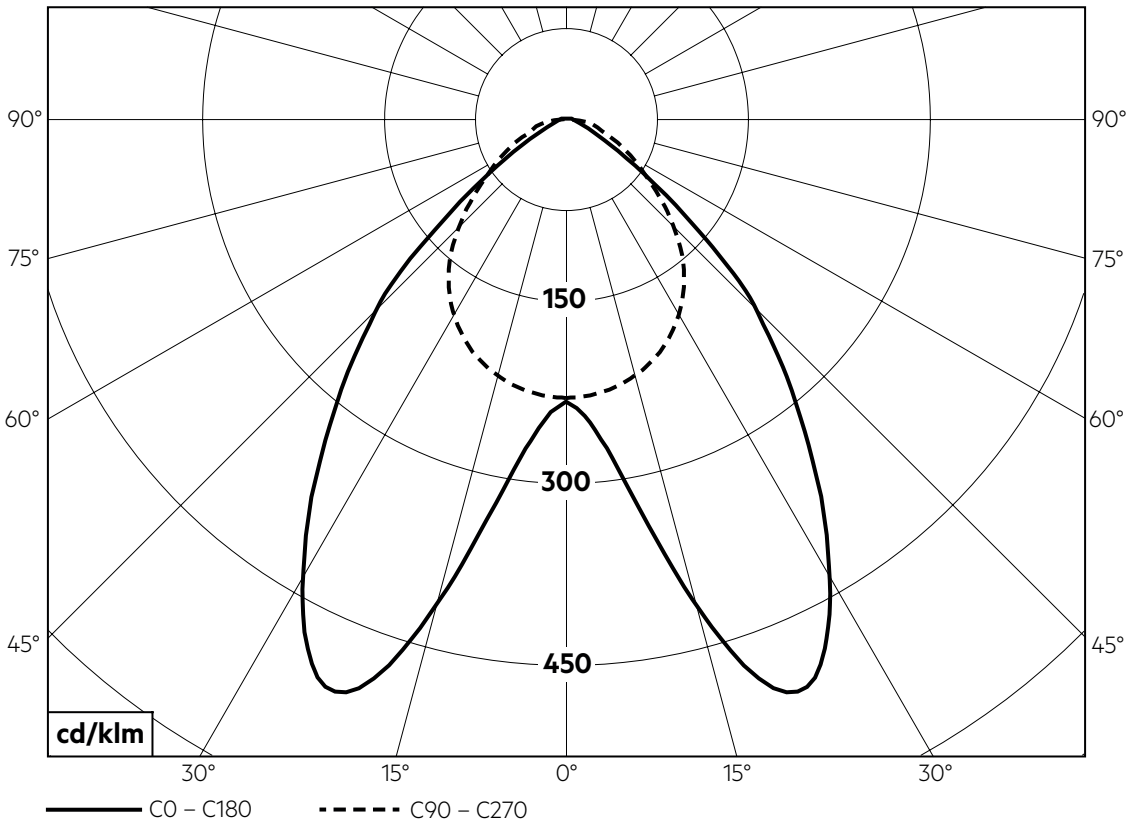
1.4 Light distribution for ACL LINEAR LENS 24mm DASY