TRIDONIC

Driver LC 75W 100–400mA flexC lp EXC

excite series

Product description

_ Constant current LED driver for luminaire installation
_ For luminaires of protection class I and protection class II
_ Adjustable output current between 100 and 400 mA via ready2mains Programmer or I-SELECT 2 plugs
_ Max. output power 75 W
_ Up to 94 % efficiency
_ Nominal lifetime up to 100,000 h
_ 5 years guarantee (conditions at https://www.tridonic.com/manufacturer-guarantee-conditions)

Housing properties

_ Low profile metal casing with white cover
_ Type of protection IP20

Interfaces

_ ready2mains (configuration via mains)
_ Terminal blocks: 0° push terminals

Functions

_ Adjustable output current in 1-mA-steps (ready2mains, I-SELECT 2)
_ Protective features (overtemperature, short-circuit, overload, no-load, input voltage range)
_ Suitable for emergency escape lighting systems acc. to EN 50172

Benefits

_ Application-oriented operating window for maximum compatibility
_ Best energy savings due to high efficiency
_ Flexible configuration via ready2mains and I-SELECT 2
_ Reliability proven by lifetime up to 100,000 h and 5 years guarantee (conditions at https://www.tridonic.com/manufacturer-guarantee-conditions)

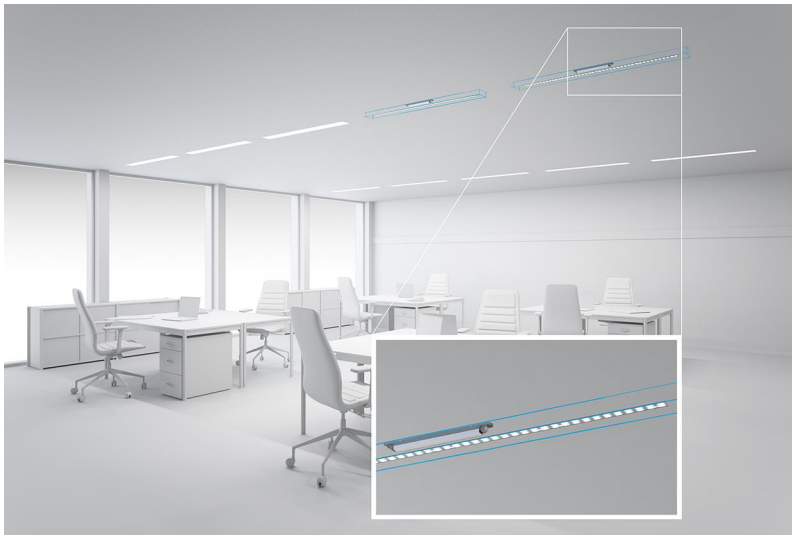

Typical applications

_ For linear/area lighting in office applications

Website

http://www.tridonic.com/28000713

Spotlights | Downlights | **Linear** | **Area** | **Floor | Wall** | **Free-standing** | Street | Decorative | High bay

Driver LC 75W 100–400mA flexC lp EXC

excite series

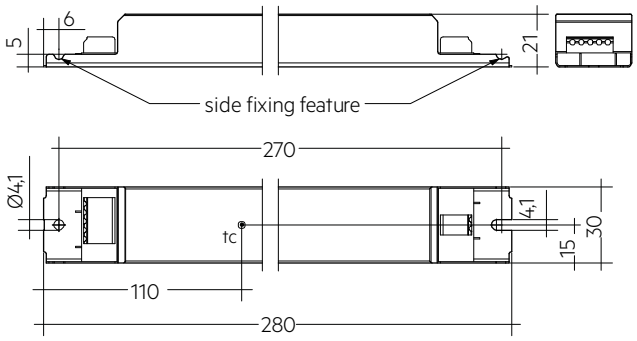

Ordering data

Type	Article number	Packaging, carton	Packaging, pallet	Weight per pc.
LC 75W 100-400mA flexC lp EXC	**28000713**	10 pc(s).	960 pc(s).	0.178 kg

Technical data

Rated supply voltage	220 – 240 V
AC voltage range	198 – 264 V
DC voltage range	176 – 280 V
Mains frequency	0 / 50 / 60 Hz
Overvoltage protection	320 V AC, 48 h
Typ. rated current (at 230 V, 50 Hz, full load) ①	350 mA
Typ. current (220 V, 0 Hz, full load) ①②	360 mA
Leakage current (at 230 V, 50 Hz, full load) ①	< 250 µA
Max. input power	80.9 W
Typ. efficiency (at 230 V, 50 Hz, full load) ①	94 %
λ (at 230 V, 50 Hz, full load)	0.99
Typ. input current in no-load operation	24 mA
Typ. input power in no-load operation	0.6 W
In-rush current (peak / duration)	30 A / 253 µs
THD (at 230 V, 50 Hz, full load)	< 10 %
Starting time (at 230 V, 50 Hz, full load)	< 500 ms
Starting time (DC mode)	< 500 ms
Switchover time (AC/DC) ③	< 0.2 s
Turn off time (at 230 V, 50 Hz, full load)	< 50 ms
Output current tolerance ④	± 5 %
Max. output current peak (non-repetitive)	≤ output current + 35 %
Output LF current ripple (< 120 Hz)	± 5 %
Output P_ST_LM (at full load)	≤ 1
Output SVM (at full load)	≤ 0.4
Max. output voltage (U-OUT)	250 V
Mains surge capability (between L - N)	1 kV
Mains surge capability (between L/N - PE)	2 kV
Burst / surge peaks output side against PE	2 kV
Type of protection	IP20
Lifetime	up to 100,000 h
Guarantee (conditions at www.tridonic.com)	5 Year(s)
Dimensions L x W x H	280 x 30 x 21 mm

Approval marks

IP20 RoHS

Standards

EN 55015, EN 61000-3-2, EN 61000-3-3, EN 61347-1, EN 61347-2-13, EN 62384, EN 61547, according to EN 50172, according to EN 60598-2-22

Specific technical data

Type	Output current①④	Min. output voltage	Max. output voltage	Max. output power	Typ. power consumption (at 230 V, 50 Hz, full load)	Typ. current consumption (at 230 V, 50 Hz, full load)	tc point max.	Ambient temperature ta	I-SELECT 2 resistor⑥ value
LC 75W 100-400mA flexC lp EXC	100 mA	60 V	220 V	22.0 W	24.3 W	114 mA	75 °C	-25 … +65 °C	–
LC 75W 100-400mA flexC lp EXC	125 mA	50 V	220 V	27.5 W	30.3 W	139 mA	75 °C	-25 … +65 °C	40.00 kΩ
LC 75W 100-400mA flexC lp EXC	150 mA	50 V	220 V	33.0 W	34.3 W	156 mA	75 °C	-25 … +65 °C	33.33 kΩ
LC 75W 100-400mA flexC lp EXC	175 mA	50 V	220 V	38.5 W	41.9 W	188 mA	75 °C	-25 … +65 °C	28.57 kΩ
LC 75W 100-400mA flexC lp EXC	200 mA	50 V	220 V	44.0 W	48.4 W	215 mA	80 °C	-25 … +60 °C	25.00 kΩ
LC 75W 100-400mA flexC lp EXC	225 mA	50 V	220 V	49.5 W	53.8 W	238 mA	80 °C	-25 … +60 °C	22.22 kΩ
LC 75W 100-400mA flexC lp EXC	250 mA	50 V	220 V	55.0 W	58.8 W	260 mA	80 °C	-25 … +60 °C	20.00 kΩ
LC 75W 100-400mA flexC lp EXC	275 mA	50 V	220 V	60.5 W	64.8 W	285 mA	80 °C	-25 … +60 °C	18.18 kΩ
LC 75W 100-400mA flexC lp EXC	300 mA	50 V	220 V	66.0 W	70.7 W	311 mA	75 °C	-25 … +55 °C	16.67 kΩ
LC 75W 100-400mA flexC lp EXC	325 mA	50 V	220 V	71.5 W	76.5 W	336 mA	75 °C	-25 … +55 °C	15.38 kΩ
LC 75W 100-400mA flexC lp EXC	350 mA	50 V	214 V	75.0 W	80.6 W	353 mA	75 °C	-25 … +55 °C	14.29 kΩ
LC 75W 100-400mA flexC lp EXC	375 mA	50 V	200 V	75.0 W	80.9 W	355 mA	75 °C	-25 … +55 °C	13.33 kΩ
LC 75W 100-400mA flexC lp EXC	400 mA	50 V	188 V	75.0 W	80.6 W	354 mA	75 °C	-25 … +55 °C	0.00 kΩ

① Depending on the selected output current.
② Valid for Drivers with „DC new“ on the label. For old version typ. current (220 V, 0 Hz, full load, 50 % dimming level) is 173 mA.
③ Valid for immediate change of power supply type otherwise the starting time is valid.
④ Output current is mean value.
⑤ The table only lists a number of possible operating points but does not cover each single point. The output current can be set within the total value range in 1-mA-steps.
⑥ Not compatible with I-SELECT (generation 1). Calculated resistor value.

I-SELECT 2 PLUG PRE / EXC

Accessory

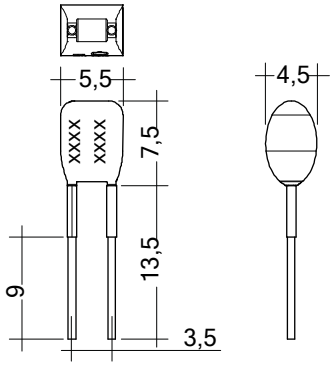

Product description

_ Ready-for-use resistor to set output current value
_ Compatible with LED driver featuring I-select 2 interface; not compatible with I-SELECT (generation 1)
_ Resistor is base insulated
_ Resistor power 0.25 W
_ Current tolerance ± 2 % additional to output current tolerance
_ Compatible with LED driver series PRE and EXC

Example of calculation

_ R [kΩ] = 5 V / I_out [mA] x 1000
_ E96 resistor value used
_ Resistor value tolerance ≤ 1 %; resistor power ≥ 0.1 W; base insulation necessary
_ When using a resistor value beyond the specified range, the output current will automatically be set to the minimum value (resistor value too big), respectively to the maximum value (resistor value too small)

Website

http://www.tridonic.com/28001101

Ordering data

Type	Article number	Colour	Marking	Current	Resistor value	Packaging, bag	Weight per pc.
I-SELECT 2 PLUG 125MA BL	**28001101**	Blue	0125 mA	125 mA	40.20 kΩ	10 pc(s).	0.001 kg
I-SELECT 2 PLUG 150MA BL	**28001102**	Blue	0150 mA	150 mA	33.20 kΩ	10 pc(s).	0.001 kg
I-SELECT 2 PLUG 175MA BL	**28001103**	Blue	0175 mA	175 mA	28.70 kΩ	10 pc(s).	0.001 kg
I-SELECT 2 PLUG 200MA BL	**28001104**	Blue	0200 mA	200 mA	24.90 kΩ	10 pc(s).	0.001 kg
I-SELECT 2 PLUG 225MA BL	**28001105**	Blue	0225 mA	225 mA	22.10 kΩ	10 pc(s).	0.001 kg
I-SELECT 2 PLUG 250MA BL	**28001106**	Blue	0250 mA	250 mA	20.00 kΩ	10 pc(s).	0.001 kg
I-SELECT 2 PLUG 275MA BL	**28001107**	Blue	0275 mA	275 mA	18.20 kΩ	10 pc(s).	0.001 kg
I-SELECT 2 PLUG 300MA BL	**28001108**	Blue	0300 mA	300 mA	16.50 kΩ	10 pc(s).	0.001 kg
I-SELECT 2 PLUG 325MA BL	**28001109**	Blue	0325 mA	325 mA	15.40 kΩ	10 pc(s).	0.001 kg
I-SELECT 2 PLUG 350MA BL	**28001110**	Blue	0350 mA	350 mA	14.30 kΩ	10 pc(s).	0.001 kg
I-SELECT 2 PLUG 375MA BL	**28001111**	Blue	0375 mA	375 mA	13.30 kΩ	10 pc(s).	0.001 kg
I-SELECT 2 PLUG 400MA BL	**28001112**	Blue	0400 mA	400 mA	12.40 kΩ	10 pc(s).	0.001 kg
I-SELECT 2 PLUG MAX BL	**28001099**	Blue	MAX	MAX	0.00 kΩ	10 pc(s).	0.001 kg

1. Standards

EN 55015
EN 61000-3-2
EN 61000-3-3
EN 61347-1
EN 61347-2-13
EN 62384
EN 61547
According to EN 50172 for use in central battery systems
According to EN 60598-2-22 suitable for emergency lighting installations

2. Thermal details and lifetime

2.1 Expected lifetime

Expected lifetime

Type	Output current	ta	40 °C	50 °C	55 °C	60 °C
LC 75W 100-400mA flexC lp EXC	< 200 mA	tc	50 °C	60 °C	65 °C	70 °C
		Lifetime	> 100,000 h	> 100,000 h	75,000 h	50,000 h
	200 – 300 mA	tc	60 °C	70 °C	75 °C	–
		Lifetime	> 100,000 h	75,000 h	50,000 h	–
	> 300 – 400 mA	tc	60 °C	70 °C	75 °C	–
		Lifetime	> 100,000 h	75,000 h	50,000 h	–

The LED driver is designed for a lifetime stated above under reference conditions and with a failure probability of less than 10 %.

The relation of tc to ta temperature depends also on the luminaire design.
If the measured tc temperature is approx. 5 K below tc max., ta temperature should be checked and eventually critical components (e.g. ELCAP) measured. Detailed information on request.

3. Installation / wiring

3.1 Circuit diagram

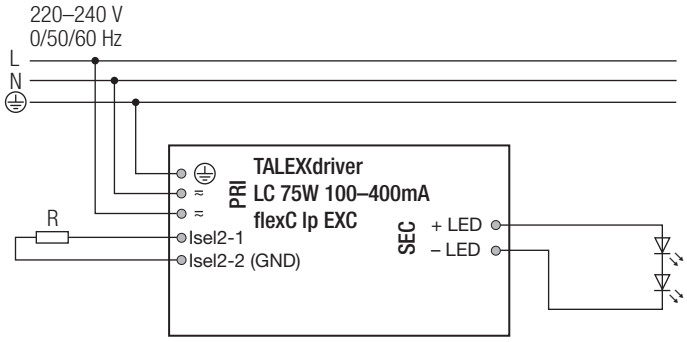

3.2 Wiring type and cross section

For wiring use solid wire from 0.5 – 1.5 mm².
Strip 8 – 9 mm of insulation from the cables to ensure perfect operation of terminals.

LED module/LED driver/supply

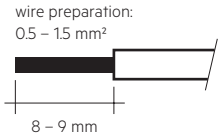

3.3 Loose wiring

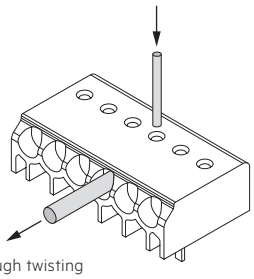

Loosen wire through twisting and pulling or using a Ø 1 mm release tool

3.4 Wiring guidelines

- Run the secondary lines separately from the mains connections and lines to achieve good EMC performance.
- The max. secondary cable length is 2 m (4 m circuit).
- For good EMC performance, keep the LED wiring as short as possible.
- Secondary switching is not permitted.
- The LED driver has no inverse-polarity protection on the secondary side. Wrong polarity can damage LED modules with no inverse-polarity protection.
- Wrong wiring of the LED driver can lead to malfunction or irreparable damage.
- To avoid the damage of the Driver, the wiring must be protected against short circuits to earth (sharp edged metal parts, metal cable clips, louver, etc.).

3.5 Hot plug-in

Hot plug-in is not supported due to residual output voltage of > 0 V.
When connecting an LED load, restart the device to activate the LED output. This can be done via mains reset.

3.6 Earth connection

The earth connection is conducted as protection earth (PE). If the LED Driver will be earthed, protection earth (PE) has to be used. There is no earth connection required for the functionality of the LED driver.
Earth connection is recommended to improve following behaviour:

- Electromagnetic interferences (EMI)
- Transmission of mains transients to the LED output

In general it is recommended to earth the LED driver if the LED module is mounted on earthed luminaire parts respectively heat sinks and thereby representing a high capacity against earth.

3.7 I-SELECT 2 resistors connected via cable

For details see:
http://www.tridonic.com/com/en/download/technical/LCA_PRE_LC_EXC_ProductManual_en.pdf.

4. Electrical values

4.1 Operating window

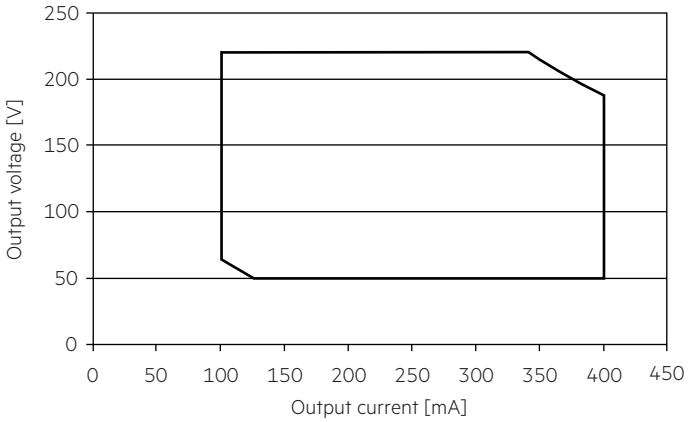

Make sure that the LED driver is operated within the given window under all operating conditions. Coming below the specified minimum output voltage of the LED driver may cause the device to shut-down.

Make sure that the LED driver is operated within the given window under all operating conditions. Special attention needs to be paid at dimming and DC emergency operation as the forward voltage of the connected LED modules varies with the dimming level, due to the implemented amplitude dimming technology. Coming below the specified minimum output voltage of the LED driver may cause the device to shut-down.
See chapter “6.7 DC emergency operation” for more information.

4.2 Efficiency vs load

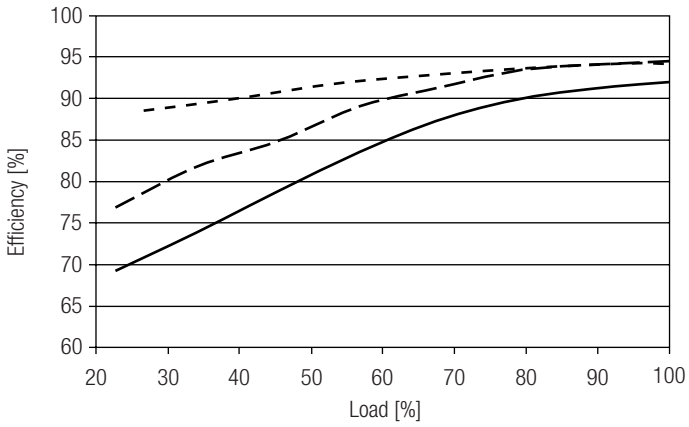

4.3 Power factor vs load

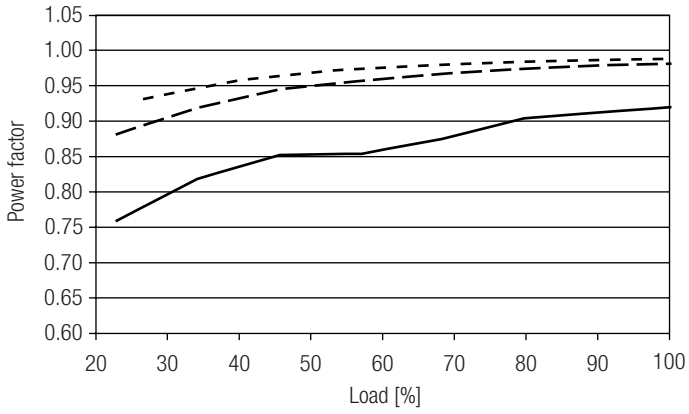

4.4 THD vs load (without harmonic < 5 mA or 0.6 % of the input current)

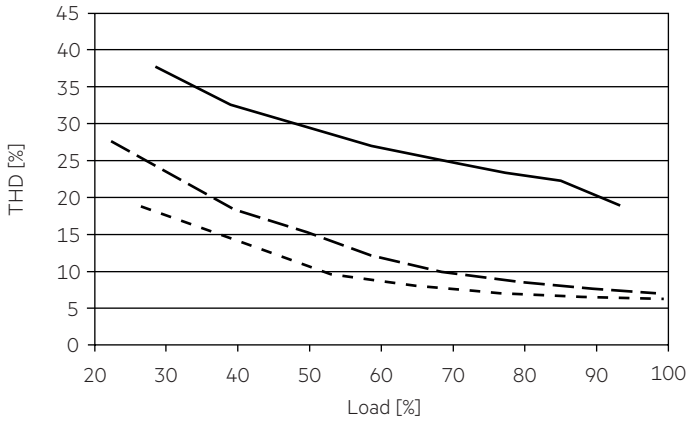

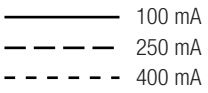

100 % load corresponds to the max. output power (full load) according to the table on page 2.

4.5 Maximum loading of automatic circuit breakers in relation to inrush current

Automatic circuit breaker type	C10	C13	C16	C20	B10	B13	B16	B20	Inrush current	
Installation Ø	1.5 mm²	1.5 mm²	2.5 mm²	2.5 mm²	1.5 mm²	1.5 mm²	2.5 mm²	2.5 mm²	I_{max}	time
LC 75W 100-400mA flexC lp EXC	16	21	26	35	10	13	16	21	30 A	253 µs

These are max. values calculated out of inrush current! Please consider not to exceed the maximum rated continuous current of the circuit breaker.
Calculation uses typical values from ABB series S200 as a reference.
Actual values may differ due to used circuit breaker types and installation environment.

4.6 Harmonic distortion in the mains supply (at 230 V / 50 Hz and full load) in %

	THD	3.	5.	7.	9.	11.
LC 75W 100-400mA flexC lp EXC	<7	< 5	< 2	< 3	< 2	< 2

5. Interfaces / communication

5.1 Configuration input ready2mains (L, N)

The digital ready2mains protocol is modulated onto the mains signal which is wired to the mains terminal (L and N).

6. Functions

6.1 Function: adjustable current

The output current of the LED driver can be adjusted in a certain range.
For adjustment there are two options available.

Option 1: I-SELECT 2
By inserting a suitable resistor or third party resistor into the I-SELECT 2 interface, the current value can be adjusted. The relationship between output current and resistor value can be found in the chapter "Accessories I-SELECT 2 Plugs".

Please note that the resistor values for I-SELECT 2 are not compatible with I-SELECT (generation 1). Installation of an incorrect resistor may cause irreparable damage to the LED module(s).

Resistors for the main output current values can be ordered from Tridonic (see accessories).

Option 2: ready2mains
Adjustment is done by the ready2mains programmer and the corresponding configuration software (see ready2mains documentation).

Current adjustment can only be done five times over ready2mains. To program the LED driver a connected load is necessary that is within the operating window of the LED driver.

The priority for current adjustment methods is I-SELECT 2 followed by ready2mains (lowest priority).

6.2 ready2mains – configuration

The ready2mains interface enables the configuration of the mostly used parameters via the mains wiring.
In the case of EXC LED driver, it is the LED output current as well as an optional lockbit to prevent any accidental configuration at a later stage.

The configuration is done via the ready2mains Programmer, either directly at the Programmer itself or via a respective software tool. For details on the configuration via ready2mains see the technical information of the Programmer and its tools.

6.3 Short-circuit behaviour

In case of a short-circuit at the LED output the LED output is switched off.
After restart of the LED driver the output will be activated again.
The restart can be done via mains reset.

6.4 No-load operation

The LED driver will not be damaged in no-load operation. The output will be deactivated and is therefore free of voltage. If a LED load is connected the device has to be restarted before the output will be activated again.

6.5 Overload protection

If the maximum load is exceeded by a defined internal limit, the LED driver turns off the LED output. After restart of the LED driver the output will be activated again.
The restart can be done via mains reset.

6.6 Overtemperature protection

The LED driver is protected against temporary thermal overheating.
If the temperature limit is exceeded the output current of the LED module(s) is reduced. The temperature protection is activated above tc max.
The activation temperature differs depending on the LED load.
On DC operation this function is deactivated to fulfill emergency requirements.

6.7 DC emergency operation

The LED driver is designed to operate on DC voltage and pulsed DC voltage.

Light output level in DC operation is 100 % (cannot be adjusted, EOF_i = 0.95).

The voltage-dependent input current of Driver incl. LED module is depending on the used load.

The nominal voltage-dependent no-load current of Driver (without or defect LED module) is for:
AC: < 24 mA (at 230 V, 50 Hz)
DC: < 5 mA (at 186 – 275 V, 0 Hz)

7. Miscellaneous

7.1 Insulation and electric strength testing of luminaires

Electronic devices can be damaged by high voltage. This has to be considered during the routine testing of the luminaires in production.

According to IEC 60598-1 Annex Q (informative only!) or ENEC 303-Annex A, each luminaire should be submitted to an insulation test with 500 V DC for one second. This test voltage should be connected between the interconnected phase and neutral terminals and the earth terminal.
The insulation resistance must be at least 2 MΩ.

As an alternative, IEC 60598-1 Annex Q describes a test of the electrical strength with 1500 V AC (or 1.414 x 1500 V DC). To avoid damage to the electronic devices this test must not be conducted.

7.2 Conditions of use and storage

Humidity:	5 % up to max. 85 %, not condensed (max. 56 days/year at 85 %)
Storage temperature:	-40 °C up to max. +80 °C

The devices have to be acclimatised to the specified temperature range (ta) before they can be operated.

The LED driver is declared as inbuilt LED controlgear, meaning it is intended to be used within a luminaire enclosure.
If the product is used outside a luminaire, the installation must provide suitable protection for people and environment (e.g. in illuminated ceilings).

7.3 Maximum number of switching cycles

All LED driver are tested with 50,000 switching cycles.
The actually achieved number of switching cycles is significantly higher.

7.4 Additional information

Additional technical information at www.tridonic.com → Technical Data

Lifetime declarations are informative and represent no warranty claim.
No warranty if device was opened.