TRIDONIC

ready2mains Gateway 400VA

ready2mains

Product description

- Interface for transmitting digital control and dimming commands to ready2mains-compatible LED drivers via the mains wiring
- Simple integration of sensors and momentary-action switch thanks to one4all interface: DALI, DSI, switchDIM, corridorFUNCTION
- Total connected load: 400 VA max. (maximum of 15 LED drivers)
- Short-circuit and overload shutdown with automatic restart, overtemperature protection
- Double terminals for through wiring
- Rapid installation of cable clamp and terminal cover, no tool required
- 5 years guarantee (conditions at https://www.tridonic.com/manufacturer-guarantee-conditions)

Interfaces

- one4all (DALI DT 254, DSI, switchDIM, corridorFUNCTION)

Website

http://www.tridonic.com/28001248

ready2mains Gateway 400VA

ready2mains

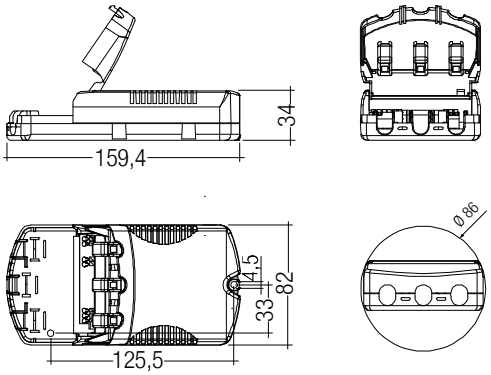

Ordering data

Type	Article number	Packaging, carton	Weight per pc.
ready2mains Gateway 400VA	**28001248**	10 pc(s).	0.22 kg

Technical data

Rated supply voltage	220 – 240 V
Input voltage AC	198 – 264 V
Max. input current (at 230 V, 50 Hz, full load)	1.74 A
Mains frequency	50 / 60 Hz
Connected load	0 – 400 VA
Power loss ①	0.75 W (1.35 W at full load)
Input, DALI/DSI control input and switchDIM	1
Current consumption of DALI	2 mA
Number of DALI addresses	1
Control range, DSI ②	0 – 100 %
Control range, DALI ②	0 – 100 %
Terminals	0.5 – 1.5 mm²
Max. cable length at 1.5 mm² ③	250 m
Ambient temperature ta	0 … +60 °C
Type of protection	IP20
Housing	Polycarbonat white RAL colour 9016
Dimensions L x W x H	159.4 x 82 x 34 mm

Approval marks

Standards

EN 61347-1, EN 61347-2-11, EN 55015, EN 61000-3-2, EN 61000-3-3, EN 61547, EN 62386-101, EN 62386-102

① Connected luminaires are switched off from mains (no stand-by losses of the connected LED drivers).
② Dimming range depends on the connected LED drivers.
③ The regional and national rules and guidelines must be observed.

1. Standards

EN 61347-1
EN 61347-2-11
EN 55015
EN 61000-3-2
EN 61000-3-3
EN 61547
According to DALI Standard V2
EN 62386-101
EN 62386-102

1.1 Glow wire test

according to EN 60598-1 with increased temperature of 850 °C passed.

2. Common

2.1 Overview ready2mains Gateway 400VA

ready2mains enables digital information to be transmitted via the mains cable with the aid of phase control. The procedure used ensures robust interference-free communication.
The ready2mains Gateway described here receives control signals via the one4all interface and transmits them to the mains cable and to all the ready2mains-compatible LED drivers connected on th secondary side. Sensors can be easily integrated. The relevant information is broadcast simultaneously to all the LED drivers.

3. Interfaces / communication

3.1 Control input (DA/N, DA/L)

Digital signals (DALI, DSI) or switchDIM can be wired on the same terminals (DA/N and DA/L).

3.2 Digital signal DALI/DSI

The control input is non-polar for digital control signals (DALI, DSI). The control signal is not SELV. Control cable has to be installed in accordance to the requirements of low voltage installations.
Different functions depending on each module.
The possible functions depend on the LED driver used.
The step width corresponds to the DALI standard.
A continuous communication (e.g. caused by dynamic dimming applications) shall be avoided as increased traffic may lead to increased operating temperature (see “Overtemperature protection”).

3.3 switchDIM

Integrated switchDIM function allows a direct connection of a push to make switch for dimming and switching.
Brief push (< 0.6 s) switches LED driver ON and OFF. The LED drivers switch-ON at light level set at switch-OFF.
When the push to make switch is held, LED drivers are dimmed.
After repush the LED drivers are dimmed in the opposite direction.
In installations with LED drivers with different dimming levels or opposite dimming directions (e.g. after a system extension), all LED drivers can be synchronized to 50 % dimming level by a 10 s push.
Use of push to make switch with indicator lamp is not permitted.

3.4 corridorFUNCTION

The corridorFUNCTION can be programmed in two different ways.
To program the corridorFUNCTION by means of software a DALI-USB interface is needed in combination with a DALI PS. The software can be the masterCONFIGURATOR.
To activate the corridorFUNCTION without using software a voltage of 230 V simply has to be applied for five minutes at the switchDIM connection.
The unit will then switch automatically to the corridorFUNCTION.

Note:
If the corridorFUNCTION is wrongly activated in a switchDIM system (for example a switch is used instead of pushbutton), there is the option of installing a pushbutton and deactivating the corridorFUNCTION mode by five short pushes of the button within three seconds.

switchDIM and corridorFUNCTION are very simple tools for controlling LED driver with conventional momentary-action switches or motion sensors.
To ensure correct operation a sinusoidal mains voltage with a frequency of 50 Hz or 60 Hz is required at the control input.
Special attention must be paid to achieving clear zero crossings. Serious mains faults may impair the operation of switchDIM and corridorFUNCTION.

4. Installation

- The ready2mains Gateway may only be used on conjunction with ready2mains-compatible LED drivers.
  LED drivers without ready2mains technology and any other loads must not be operated via the ready2mains Gateway.
- DSI / DALI is not SELV. Apply the installation instructions for mains voltage.
- Make sure the L and N polarity on the primary side is correct.
  If the polarity is incorrect the neutral conductor will be live!
- For the system and its protective equipment to operate correctly, L and L_out as well as N and N_out must be strictly separated via the Gateway. L_out and N_out may only be used to operate ready2mains-compatible LED drivers.
- Do not exceed the maximum permissible number of connected LED drivers. For more information see the section on „Maximum number of LED drivers“.
- Gateways must not be cascaded.
- Gateways can be operated on a 3-phase power supply.
  On the output side each Gateway must have its own neutral conductor however. Secondary-side neutral conductors must not be connected together!
- Connecting and disconnecting luminaries to the secondary side while Gateway is powered up can cause non-reversible damage.

4.1 LED drivers to be connected

Only ready2mains-compatible LED drivers may be connected to the Gateway. Any other mode of operation may damage the Gateway and/or the connected LED drivers.

ready2mains-compatible LED drivers can be identified by the label „supports ready2mains“ and an appropriate indication in the data sheet.

4.2 Maximum number of LED drivers

- The total connected apparent power must not exceed the maximum connected load of the Gateway.
- No more than 15 LED drivers may be connected.
  This limitation is necessary because of the discharge currents that have to be handled by the Gateway during generation of the ready2mains signals.

Neither of these limitation may be exceeded.

4.3 Calculation of the apparent power

The maximum connected load of the Gateway is specified in the „Technical data“ section and is calculated as the total apparent power of all the connected LED drivers.
Apparent power (in VA) is calculated as the quotient of the true power (in W) and the power factor (λ).
Detailed values for the individual LED drivers are given in the relevant data sheets.

$$S = \frac{P}{\lambda}$$

4.4 Wiring diagram for DALI / DSI

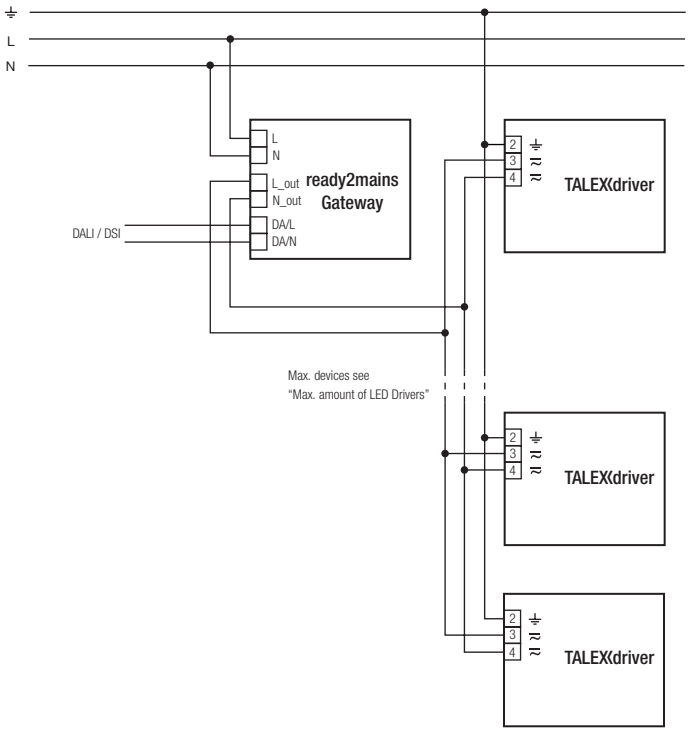

4.5 Wiring diagram for switchDIM

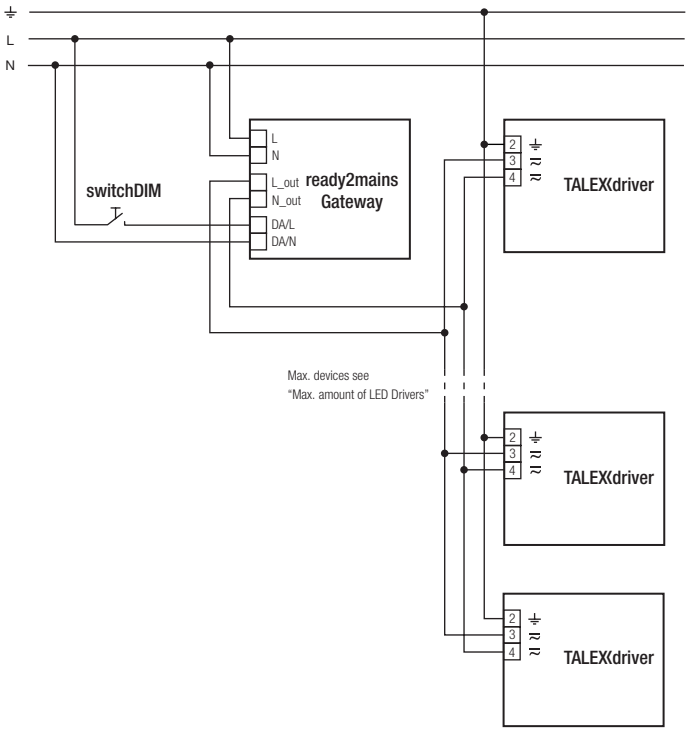

4.6 Wiring diagram for corridorFUNCTION

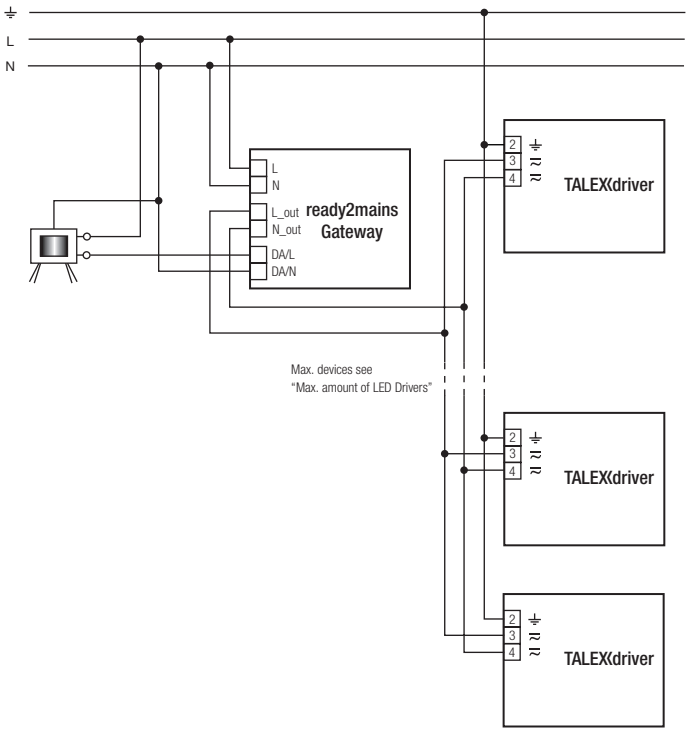

4.7 Wiring diagram with basicDIM DGC

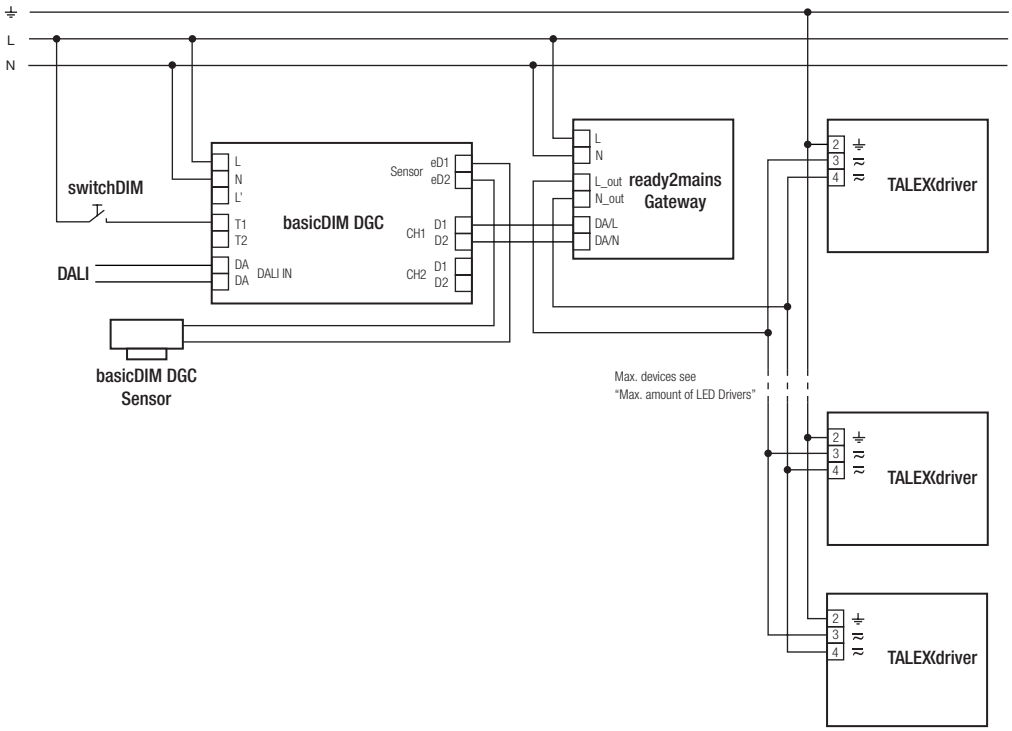

4.8 Wiring diagram for emergency

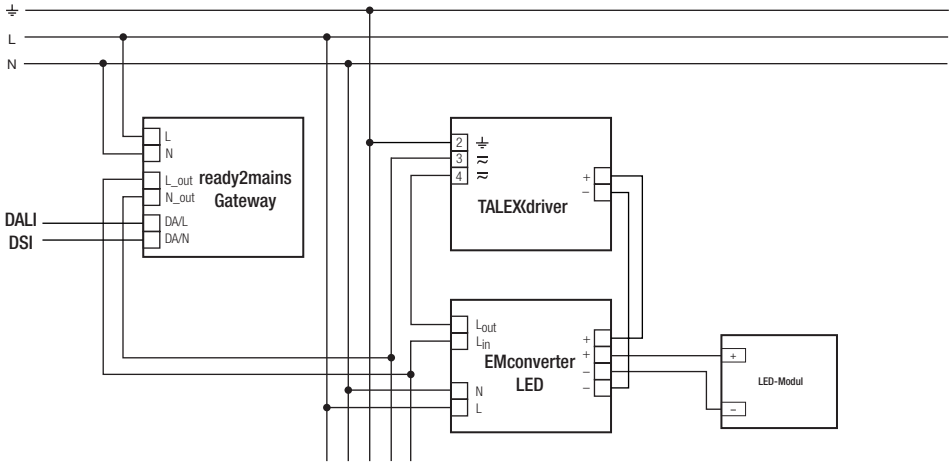

The mains detection occours on the permanent live.
The emergency unit cannot detect a failure of the gateway!

4.9 Installation instructions

For wiring use stranded wire with ferrules or solid wire from 0.5–1.5 mm².
Strip 9.5 mm of insulation from the cables to ensure perfect operation of the push-wire terminals.
Use one wire for each terminal connector only.

wire preparation:
0.5 – 1.5 mm²

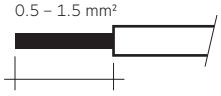

8.5 – 9.5 mm

4.10 Release of the wiring

Press down the "push button" and remove the cable from front.

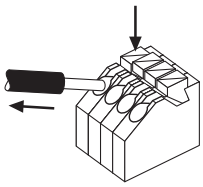

5. Functions

5.1 Short-circuit behaviour

If there is a short-circuit at the output the Gateway will switch off and restart after 500 ms. If another 5 short-circuits are detected the Gateway will switch off and will be reactivated only after a mains reset.

5.2 Mains overvoltage protection

The output is disconnected if the input voltage exceeds 288 V.
As soon as the voltage falls below this limit value the Gateway will automatically restart. It cannot be switched on if the voltage is more than 288 V.

5.3 Overload protection

If the maximum permissible connected load is exceeded the Gateway will switch off the output and restart after 10 s. If the overload persists the Gateway will switch off and will be reactivated only after a mains reset.

5.4 Overtemperature protection

If a temperature of 65 °C in the Gateway is exceeded the data rate will be gradually linear reduced. Commands will therefore be implemented by the LED driver with a slight delay, causing visible dimming steps. If the temperature continues to rise and reaches a value of 120 °C, the Gateway will switch off and will be reactivated only after a mains reset.

5.5 Main interruptions / emergency behaviour

Interruptions of the mains supply will be detected by the ready2mains Gateway, its re-appearance will be signalled by a short flashing of the connected luminaires. This signalling will also appear in self-contained emergency installations.

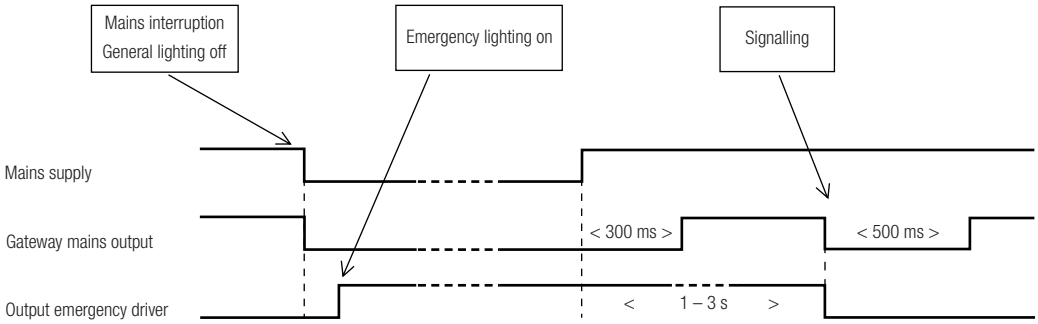

6. Miscellaneous

6.1 Disposal of equipment

Return old devices in accordance with the WEEE directive to suitable recycling facilities.

6.2 Additional information

Additional technical information at www.tridonic.com → Technical Data

Guarantee conditions at www.tridonic.com → Services

Lifetime declarations are informative and represent no warranty claim.
No warranty if device was opened.