Driver LCO 90W 200–1050mA 165V one4all NFC C EXC3

excite NFC outdoor series

Product description

_ NEW: lumDATA (DALI-2 part ext. 251, 252 and 253)
_ Dimmable built-in constant current outdoor LED driver
_ Dimming range 5 – 100 % (min. 10 mA)
_ For luminaires of protection class I and protection class II
_ Temperature protection as per EN 61347-2-13 C5e
_ Output current adjustable between 200 – 1,050 mA via NFC, DALI or ready2mains Programmer
_ Max. output power 90 W
_ Up to 92.5 % efficiency
_ Lowest power input on stand-by < 0.16 W
_ Article number 28003162: Made in Europe, article number 87500717: Made in China.
_ Nominal lifetime of 100,000 h and 8 years guarantee (conditions at https://www.tridonic.com/manufacturer-guarantee-conditions)

Interfaces

_ Near field communication (NFC)
_ one4all (DALI-2 DT 6, DSI, switchDIM, corridorFUNCTION)
_ ready2mains (configuration via mains)
_ U6Me2 (configuration of chronoSTEP via mains)
_ Terminal blocks: 45° / 0° push terminals

Functions

_ Adjustable output current in 1-mA-steps (NFC, DALI, ready2mains)
_ Programmable chronoSTEP: times and levels (NFC, DALI, U6Me2, ready2mains)
_ Fulfills DALI-2 parts: 251 (Luminaire data), 252 (Energy reporting) and 253 (Diagnostics & Maintenance)
_ Dimming through mains voltage (inputDIM)
_ Enhanced constant light output function (eCLO)
_ Protective features (overtemperature, short-circuit, overload, no-load, input voltage range, reduced surge amplification)
_ Configurable external temperature management (ETM)
_ Intelligent Temperature Guard (ITG)
_ Intelligent Voltage Guard Plus (IVG+)
_ Suitable for emergency escape lighting systems acc. to EN 50172

Benefits

_ Flexible configuration via companionSUITE (NFC, DALI, ready2mains™) or U6Me2 programmer
_ Application-oriented operating window for maximum compatibility
_ Best energy savings due to low stand-by losses and high efficiency
_ In-field programming possible after installation with NFC interface and ready2mains
_ High overvoltage protection: up to 10 kV asymmetric (protection class I and II)

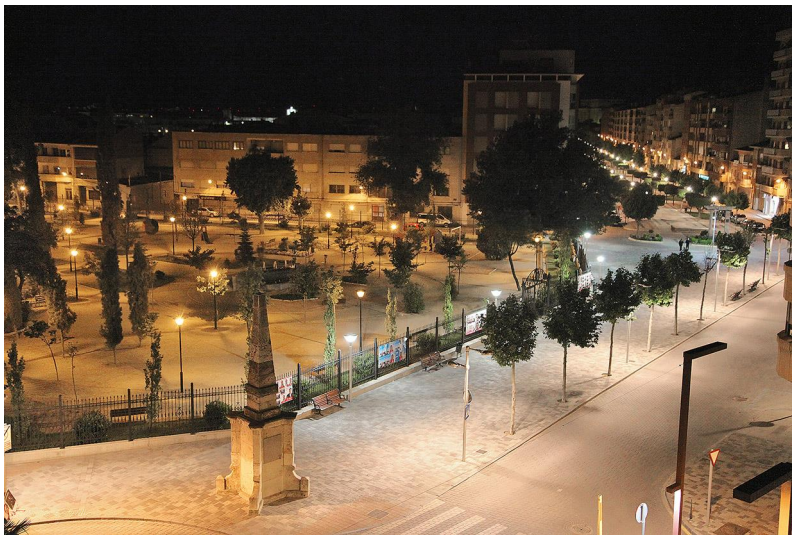

Typical applications

_ Road, street and industry

Website

http://www.tridonic.com/28003162

Driver LCO 90W 200–1050mA 165V one4all NFC C EXC3

excite NFC outdoor series

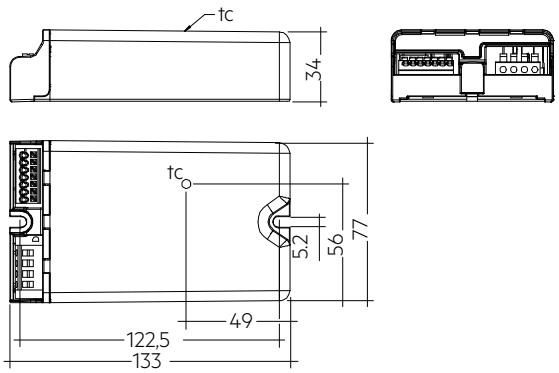

Ordering data

Type	Article number	Packaging, carton	Packaging, pallet	Weight per pc.
LCO 90/200-1050/165 o4a NF C EXC3	**28003162**	20 pc(s).	1,200 pc(s).	0.523 kg
LCO 90/200-1050/165 o4a NF C EXC3	**87500717**	20 pc(s).	280 pc(s).	0.523 kg

Technical data

Rated supply voltage	220 – 240 V
AC voltage range	198 – 264 V
inputDIM voltage range	170 – 250V
DC voltage range	176 – 280 V
Mains frequency	0 / 50 / 60 Hz
Overvoltage protection	320 V AC, 48 h
Typ. current (at 230 V, 50 Hz, full load) ①②	126 – 436 mA
Typ. current (220 V, 0 Hz, full load, 15 % dimming level) ②	31 – 79 mA
Leakage current (at 230 V, 50 Hz, full load) ①②	< 450 µA
Touch current (equipotential connected) ③	480 µA
Max. input power	99.5 W
Typ. efficiency (at 230 V, 50 Hz, full load) ②④	92.5 %
λ (at 230 V, 50 Hz, full load) ①	0.98
Typ. power consumption on stand-by ⑤	< 0.16 W
In-rush current (peak / duration)	41.6 A / 238 µs
THD (at 230 V, 50 Hz, full load) ①	< 10 %
Starting time (at 230 V, 50 Hz, full load)	< 750 ms
Starting time (DC mode)	< 800 ms
Switchover time (AC/DC) ⑥	< 300 ms
Turn off time (at 230 V, 50 Hz, full load)	< 500 ms
Output current tolerance ①⑦	± 3 %
Max. output current peak (non-repetitive)	≤ output current + 15 %
Output LF current ripple (< 120 Hz)	± 5 %
Output P_ST_LM (at full load)	≤ 1
Output SVM (at full load)	≤ 0.4
Max. output voltage (U-OUT)	220 V
Max. output voltage (HV)	220 V
Max. output voltage (LV)	130 V
Dimming range	5 – 100 % (min. 10 mA)
Mains surge capability (between L - N) ⑧	6 kV / 3 kA
Mains surge capability (between L/N - PE)	6 kV
Mains surge capability up to (between L/N - PE) without DALI connection	10 kV
Burst protection ⑨	6 kV
Surge voltage at output side (against PE)	< 1 kV
Type of protection	IP20
Lifetime	up to 100,000 h
Guarantee (conditions at www.tridonic.com)	8 Year(s)
Dimensions L x W x H	133 x 77 x 34 mm

Approval marks

Standards

EN 55015, EN 61000-3-2, EN 61000-3-3, EN 61000-4-4, EN 61000-4-5, EN 61347-1, EN 61347-2-13, EN 62384, EN 61547, EN 62386-101, EN 62386-102, EN 62386-207 (DALI-2), according to EN 50172, according to EN 60598-2-22

Specific technical data

Type	Article number	Output current ⑦	Min. output voltage	Max. output voltage	Max. output power	Typ. power consumption (at 230 V, 50 Hz, full load)	Typ. current consumption (at 230 V, 50 Hz, full load)	tc point max.	Ambient temperature ta
High voltage output (HV)									
LCO 90/200-1050/165 o4a NF C EXC3	**28003162**	200 mA	78.0 V	165.0 V	33.0 W	38.5 W	181 mA	95 °C	-40 … +70 °C
LCO 90/200-1050/165 o4a NF C EXC3	**28003162**	250 mA	78.0 V	165.0 V	41.3 W	47.1 W	216 mA	95 °C	-40 … +70 °C
LCO 90/200-1050/165 o4a NF C EXC3	**28003162**	300 mA	78.0 V	165.0 V	49.5 W	55.4 W	251 mA	100 °C	-40 … +70 °C
LCO 90/200-1050/165 o4a NF C EXC3	**28003162**	350 mA	78.0 V	165.0 V	57.8 W	63.8 W	287 mA	100 °C	-40 … +70 °C
LCO 90/200-1050/165 o4a NF C EXC3	**28003162**	400 mA	78.0 V	165.0 V	66.0 W	71.9 W	321 mA	100 °C	-40 … +70 °C
LCO 90/200-1050/165 o4a NF C EXC3	**28003162**	450 mA	78.0 V	165.0 V	74.3 W	80.6 W	359 mA	100 °C	-40 … +70 °C
LCO 90/200-1050/165 o4a NF C EXC3	**28003162**	500 mA	78.0 V	165.0 V	82.5 W	89.4 W	397 mA	100 °C	-40 … +65 °C
LCO 90/200-1050/165 o4a NF C EXC3	**28003162**	550 mA	78.0 V	163.6 V	90.0 W	97.5 W	432 mA	100 °C	-40 … +65 °C
LCO 90/200-1050/165 o4a NF C EXC3	**28003162**	600 mA	78.0 V	150.0 V	90.0 W	97.0 W	430 mA	95 °C	-40 … +65 °C
LCO 90/200-1050/165 o4a NF C EXC3	**28003162**	650 mA	78.0 V	138.5 V	90.0 W	96.7 W	428 mA	95 °C	-40 … +65 °C
LCO 90/200-1050/165 o4a NF C EXC3	**28003162**	700 mA	78.0 V	128.6 V	90.0 W	96.6 W	428 mA	95 °C	-40 … +65 °C
LCO 90/200-1050/165 o4a NF C EXC3	**28003162**	750 mA	78.0 V	120.0 V	90.0 W	96.8 W	429 mA	95 °C	-40 … +65 °C
LCO 90/200-1050/165 o4a NF C EXC3	**28003162**	800 mA	78.0 V	112.5 V	90.0 W	96.6 W	428 mA	95 °C	-40 … +65 °C
LCO 90/200-1050/165 o4a NF C EXC3	**28003162**	850 mA	78.0 V	105.9 V	90.0 W	96.6 W	428 mA	95 °C	-40 … +65 °C
LCO 90/200-1050/165 o4a NF C EXC3	**28003162**	900 mA	78.0 V	100.0 V	90.0 W	96.8 W	429 mA	100 °C	-40 … +70 °C
LCO 90/200-1050/165 o4a NF C EXC3	**28003162**	950 mA	78.0 V	94.7 V	90.0 W	96.7 W	428 mA	100 °C	-40 … +70 °C
LCO 90/200-1050/165 o4a NF C EXC3	**28003162**	1,000 mA	78.0 V	90.0 V	90.0 W	96.7 W	429 mA	100 °C	-40 … +70 °C
LCO 90/200-1050/165 o4a NF C EXC3	**28003162**	1,050 mA	78.0 V	85.7 V	90.0 W	96.7 W	428 mA	100 °C	-40 … +70 °C
LCO 90/200-1050/165 o4a NF C EXC3	**87500717**	200 mA	78.0 V	165.0 V	33.0 W	38.5 W	181 mA	95 °C	-40 … +70 °C
LCO 90/200-1050/165 o4a NF C EXC3	**87500717**	250 mA	78.0 V	165.0 V	41.3 W	47.1 W	216 mA	95 °C	-40 … +70 °C
LCO 90/200-1050/165 o4a NF C EXC3	**87500717**	300 mA	78.0 V	165.0 V	49.5 W	55.4 W	251 mA	100 °C	-40 … +70 °C
LCO 90/200-1050/165 o4a NF C EXC3	**87500717**	350 mA	78.0 V	165.0 V	57.8 W	63.8 W	287 mA	100 °C	-40 … +70 °C
LCO 90/200-1050/165 o4a NF C EXC3	**87500717**	400 mA	78.0 V	165.0 V	66.0 W	71.9 W	321 mA	100 °C	-40 … +70 °C
LCO 90/200-1050/165 o4a NF C EXC3	**87500717**	450 mA	78.0 V	165.0 V	74.3 W	80.6 W	359 mA	100 °C	-40 … +70 °C
LCO 90/200-1050/165 o4a NF C EXC3	**87500717**	500 mA	78.0 V	165.0 V	82.5 W	89.4 W	397 mA	100 °C	-40 … +65 °C
LCO 90/200-1050/165 o4a NF C EXC3	**87500717**	550 mA	78.0 V	163.6 V	90.0 W	97.5 W	432 mA	100 °C	-40 … +65 °C
LCO 90/200-1050/165 o4a NF C EXC3	**87500717**	600 mA	78.0 V	150.0 V	90.0 W	97.0 W	430 mA	95 °C	-40 … +65 °C
LCO 90/200-1050/165 o4a NF C EXC3	**87500717**	650 mA	78.0 V	138.5 V	90.0 W	96.7 W	428 mA	95 °C	-40 … +65 °C
LCO 90/200-1050/165 o4a NF C EXC3	**87500717**	700 mA	78.0 V	128.6 V	90.0 W	96.6 W	428 mA	95 °C	-40 … +65 °C
LCO 90/200-1050/165 o4a NF C EXC3	**87500717**	750 mA	78.0 V	120.0 V	90.0 W	96.8 W	429 mA	95 °C	-40 … +65 °C
LCO 90/200-1050/165 o4a NF C EXC3	**87500717**	800 mA	78.0 V	112.5 V	90.0 W	96.6 W	428 mA	95 °C	-40 … +65 °C
LCO 90/200-1050/165 o4a NF C EXC3	**87500717**	850 mA	78.0 V	105.9 V	90.0 W	96.6 W	428 mA	95 °C	-40 … +65 °C
LCO 90/200-1050/165 o4a NF C EXC3	**87500717**	900 mA	78.0 V	100.0 V	90.0 W	96.8 W	429 mA	100 °C	-40 … +70 °C
LCO 90/200-1050/165 o4a NF C EXC3	**87500717**	950 mA	78.0 V	94.7 V	90.0 W	96.7 W	428 mA	100 °C	-40 … +70 °C
LCO 90/200-1050/165 o4a NF C EXC3	**87500717**	1,000 mA	78.0 V	90.0 V	90.0 W	96.7 W	429 mA	100 °C	-40 … +70 °C
LCO 90/200-1050/165 o4a NF C EXC3	**87500717**	1,050 mA	78.0 V	85.7 V	90.0 W	96.7 W	428 mA	100 °C	-40 … +70 °C
Low voltage output (LV)									
LCO 90/200-1050/165 o4a NF C EXC3	**28003162**	200 mA	72.0 V	97.0 V	19.4 W	24.9 W	126 mA	95 °C	-40 … +70 °C
LCO 90/200-1050/165 o4a NF C EXC3	**28003162**	250 mA	57.6 V	97.0 V	24.3 W	30.0 W	147 mA	95 °C	-40 … +70 °C
LCO 90/200-1050/165 o4a NF C EXC3	**28003162**	300 mA	48.0 V	97.0 V	29.1 W	35.1 W	167 mA	95 °C	-40 … +70 °C
LCO 90/200-1050/165 o4a NF C EXC3	**28003162**	350 mA	46.0 V	97.0 V	34.0 W	40.1 W	187 mA	100 °C	-40 … +70 °C
LCO 90/200-1050/165 o4a NF C EXC3	**28003162**	400 mA	46.0 V	97.0 V	38.8 W	45.4 W	209 mA	100 °C	-40 … +70 °C
LCO 90/200-1050/165 o4a NF C EXC3	**28003162**	450 mA	46.0 V	97.0 V	43.7 W	50.3 W	229 mA	100 °C	-40 … +70 °C
LCO 90/200-1050/165 o4a NF C EXC3	**28003162**	500 mA	46.0 V	97.0 V	48.5 W	55.5 W	251 mA	100 °C	-40 … +70 °C
LCO 90/200-1050/165 o4a NF C EXC3	**28003162**	550 mA	46.0 V	97.0 V	53.4 W	60.2 W	271 mA	100 °C	-40 … +70 °C
LCO 90/200-1050/165 o4a NF C EXC3	**28003162**	600 mA	46.0 V	97.0 V	58.2 W	65.1 W	293 mA	100 °C	-40 … +70 °C
LCO 90/200-1050/165 o4a NF C EXC3	**28003162**	650 mA	46.0 V	97.0 V	63.1 W	70.5 W	315 mA	100 °C	-40 … +65 °C
LCO 90/200-1050/165 o4a NF C EXC3	**28003162**	700 mA	46.0 V	97.0 V	67.9 W	75.7 W	337 mA	100 °C	-40 … +65 °C
LCO 90/200-1050/165 o4a NF C EXC3	**28003162**	750 mA	46.0 V	97.0 V	72.8 W	80.7 W	359 mA	100 °C	-40 … +65 °C
LCO 90/200-1050/165 o4a NF C EXC3	**28003162**	800 mA	46.0 V	97.0 V	77.6 W	85.9 W	381 mA	95 °C	-40 … +65 °C
LCO 90/200-1050/165 o4a NF C EXC3	**28003162**	850 mA	46.0 V	97.0 V	82.5 W	91.1 W	404 mA	100 °C	-40 … +65 °C
LCO 90/200-1050/165 o4a NF C EXC3	**28003162**	900 mA	46.0 V	97.0 V	87.3 W	96.1 W	426 mA	100 °C	-40 … +65 °C
LCO 90/200-1050/165 o4a NF C EXC3	**28003162**	950 mA	46.0 V	94.7 V	90.0 W	98.4 W	436 mA	100 °C	-40 … +65 °C
LCO 90/200-1050/165 o4a NF C EXC3	**28003162**	1,000 mA	46.0 V	90.0 V	90.0 W	97.9 W	433 mA	100 °C	-40 … +65 °C
LCO 90/200-1050/165 o4a NF C EXC3	**28003162**	1,050 mA	46.0 V	85.7 V	90.0 W	98.0 W	434 mA	100 °C	-40 … +65 °C
LCO 90/200-1050/165 o4a NF C EXC3	**87500717**	200 mA	72.0 V	97.0 V	19.4 W	24.9 W	126 mA	95 °C	-40 … +70 °C
LCO 90/200-1050/165 o4a NF C EXC3	**87500717**	250 mA	57.6 V	97.0 V	24.3 W	30.0 W	147 mA	95 °C	-40 … +70 °C
LCO 90/200-1050/165 o4a NF C EXC3	**87500717**	300 mA	48.0 V	97.0 V	29.1 W	35.1 W	167 mA	95 °C	-40 … +70 °C
LCO 90/200-1050/165 o4a NF C EXC3	**87500717**	350 mA	46.0 V	97.0 V	34.0 W	40.1 W	187 mA	100 °C	-40 … +70 °C
LCO 90/200-1050/165 o4a NF C EXC3	**87500717**	400 mA	46.0 V	97.0 V	38.8 W	45.4 W	209 mA	100 °C	-40 … +70 °C
LCO 90/200-1050/165 o4a NF C EXC3	**87500717**	450 mA	46.0 V	97.0 V	43.7 W	50.3 W	229 mA	100 °C	-40 … +70 °C
LCO 90/200-1050/165 o4a NF C EXC3	**87500717**	500 mA	46.0 V	97.0 V	48.5 W	55.5 W	251 mA	100 °C	-40 … +70 °C
LCO 90/200-1050/165 o4a NF C EXC3	**87500717**	550 mA	46.0 V	97.0 V	53.4 W	60.2 W	271 mA	100 °C	-40 … +70 °C
LCO 90/200-1050/165 o4a NF C EXC3	**87500717**	600 mA	46.0 V	97.0 V	58.2 W	65.1 W	293 mA	100 °C	-40 … +70 °C
LCO 90/200-1050/165 o4a NF C EXC3	**87500717**	650 mA	46.0 V	97.0 V	63.1 W	70.5 W	315 mA	100 °C	-40 … +65 °C
LCO 90/200-1050/165 o4a NF C EXC3	**87500717**	700 mA	46.0 V	97.0 V	67.9 W	75.7 W	337 mA	100 °C	-40 … +65 °C
LCO 90/200-1050/165 o4a NF C EXC3	**87500717**	750 mA	46.0 V	97.0 V	72.8 W	80.7 W	359 mA	100 °C	-40 … +65 °C

Type	Article number	Output current⑦	Min. output voltage	Max. output voltage	Max. output power	Typ. power consumption (at 230 V, 50 Hz, full load)	Typ. current consumption (at 230 V, 50 Hz, full load)	tc point max.	Ambient temperature ta
LCO 90/200-1050/165 o4a NF C EXC3	**87500717**	800 mA	46.0 V	97.0 V	77.6 W	85.9 W	381 mA	95 °C	-40 … +65 °C
LCO 90/200-1050/165 o4a NF C EXC3	**87500717**	850 mA	46.0 V	97.0 V	82.5 W	91.1 W	404 mA	100 °C	-40 … +65 °C
LCO 90/200-1050/165 o4a NF C EXC3	**87500717**	900 mA	46.0 V	97.0 V	87.3 W	96.1 W	426 mA	100 °C	-40 … +65 °C
LCO 90/200-1050/165 o4a NF C EXC3	**87500717**	950 mA	46.0 V	94.7 V	90.0 W	98.4 W	436 mA	100 °C	-40 … +65 °C
LCO 90/200-1050/165 o4a NF C EXC3	**87500717**	1,000 mA	46.0 V	90.0 V	90.0 W	97.9 W	433 mA	100 °C	-40 … +65 °C
LCO 90/200-1050/165 o4a NF C EXC3	**87500717**	1,050 mA	46.0 V	85.7 V	90.0 W	98.0 W	434 mA	100 °C	-40 … +65 °C

① Valid at 100 % dimming level.
② Depending on the selected output current.
③ Maximum of "perception and reaction" and "let go" values according to EN 60598-1.
④ Tolerance range ± 5 %.
⑤ Depending on the DALI traffic at the interface.
⑥ Valid for immediate change of power supply type otherwise the starting time is valid.
⑦ Output current is mean value.
⑧ L-N acc. to EN 61000-4-5. 2 Ohm, 1.2/50 µs, 8/20 µs.
⑨ Also applies to corridorFUNCTION.

1. Standards

EN 55015
EN 61000-3-2
EN 61000-3-3
EN 61000-4-4
EN 61000-4-5
EN 61347-1
EN 61347-2-13
EN 62384
EN 61547
EN 62386-101 (DALI-2)
EN 62386-102 (DALI-2)
EN 62386-207 (DALI-2)
According to EN 50172 for use in central battery systems
According to EN 60598-2-22 suitable for emergency luminaire

1.1 Glow wire test

according to EN 61347-1 with increased temperature of 850 °C passed.

1.2 Light modulation

according to IEEE 1789 device fulfils "no observable effect level".

2. Thermal details and lifetime

2.1 Expected lifetime

Expected lifetime HV

Type	Output current	ta	40 °C	45 °C	50 °C	55 °C	60 °C	65 °C	70 °C
LCO 90/200-1050/165 o4a NF C EXC3	200 – 250 mA	tc	65 °C	70 °C	75 °C	80 °C	85 °C	90 °C	95 °C
		Lifetime	> 100,000 h	> 100,000 h	> 100,000 h	> 100,000 h	> 100,000 h	> 100,000 h	70,000 h
	>250 – 450 mA	tc	70 °C	75 °C	80 °C	85 °C	90 °C	95 °C	100 °C
		Lifetime	> 100,000 h	> 100,000 h	> 100,000 h	> 100,000 h	> 100,000 h	75,000 h	50,000 h
	>450 – 550 mA	tc	70 °C	75 °C	80 °C	85 °C	90 °C	100 °C	–
		Lifetime	> 100,000 h	> 100,000 h	> 100,000 h	> 100,000 h	75,000 h	50,000 h	–
	>550 – 850 mA	tc	70 °C	75 °C	80 °C	85 °C	90 °C	95 °C	–
		Lifetime	> 100,000 h	> 100,000 h	> 100,000 h	> 100,000 h	75,000 h	50,000 h	–
	>850 – 1,050 mA	tc	70 °C	75 °C	80 °C	85 °C	90 °C	95 °C	100 °C
		Lifetime	> 100,000 h	> 100,000 h	> 100,000 h	> 100,000 h	> 100,000 h	75,000 h	50,000 h

Expected lifetime LV

Type	Output current	ta	40 °C	45 °C	50 °C	55 °C	60 °C	65 °C	70 °C
LCO 90/200-1050/165 o4a NF C EXC3	200 – 300 mA	tc	65 °C	70 °C	75 °C	80 °C	85 °C	90 °C	95 °C
		Lifetime	> 100,000 h	> 100,000 h	> 100,000 h	> 100,000 h	> 100,000 h	> 100,000 h	75,000 h
	>300 – 600 mA	tc	70 °C	75 °C	80 °C	85 °C	90 °C	95 °C	100 °C
		Lifetime	> 100,000 h	> 100,000 h	> 100,000 h	> 100,000 h	> 100,000 h	> 100,000 h	50,000 h
	>600 – 1,050 mA	tc	75 °C	80 °C	85 °C	90 °C	95 °C	100 °C	–
		Lifetime	> 100,000 h	> 100,000 h	> 100,000 h	> 100,000 h	75,000 h	50,000 h	–

The LED driver is designed for a lifetime stated above under reference conditions and with a failure probability of less than 10 %.

The relation of tc to ta temperature depends also on the luminaire design.
If the measured tc temperature is approx. 5 K below tc max., ta temperature should be checked and eventually critical components (e.g. ELCAP) measured. Detailed information on request.

3. Installation / wiring

3.1 Circuit diagram

DALI with high voltage output (HV)

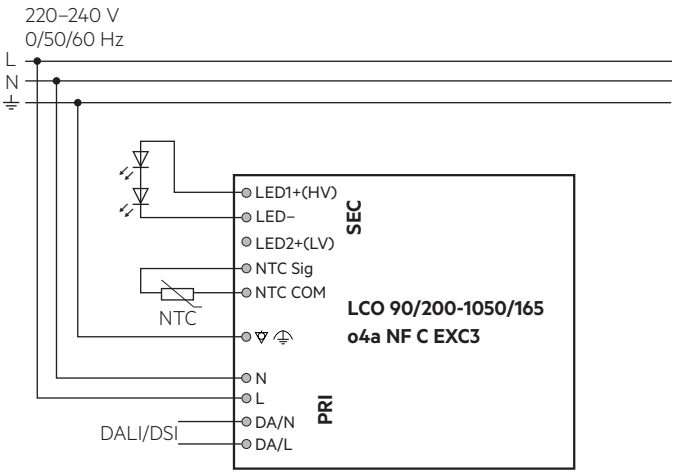

DALI with low voltage output (LV)

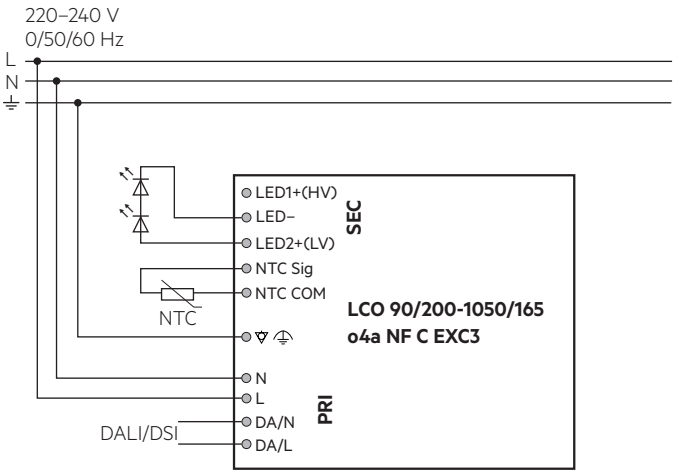

switchDIM with high voltage output (HV)

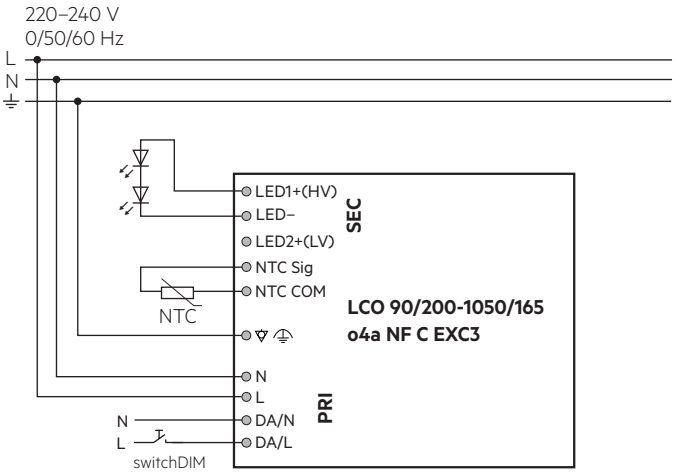

switchDIM with low voltage output (LV)

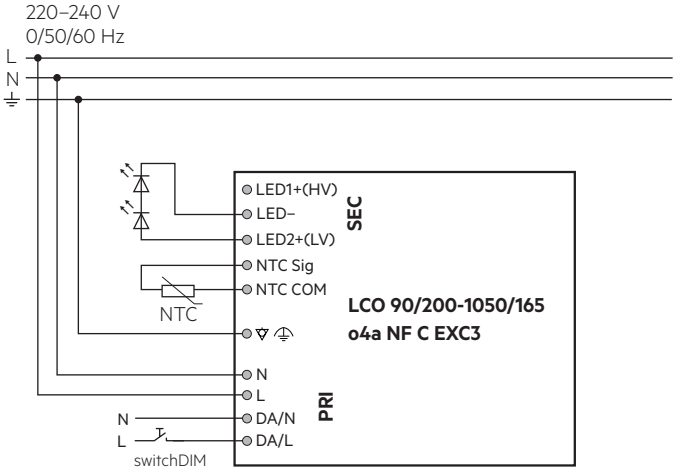

For wiring in dimming operation with ready2mains refer to the ready2mains Gateway data sheet.

3.2 Wiring type and cross section

Input side:
For wiring use solid wire from 0.5 – 2.5 mm².
Strip 10 – 11 mm of insulation from the cables to ensure perfect operation of terminals.

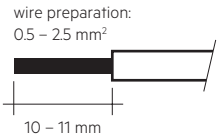

Output side:
For wiring use solid wire from 0.2 – 1.5 mm².
Strip 8.5 – 9.5 mm of insulation from the cables to ensure perfect operation of terminals.

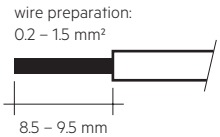

3.3 Wiring guidelines

- The cables should be run separately from the mains connections and mains cables to ensure good EMC conditions.
- The max. secondary cable length (NTC, LED) is 2 m (4 m circuit).
- For good EMC performance, keep the LED wiring as short as possible.
- Secondary switching is not permitted.
- The LED driver has no inverse-polarity protection on the secondary side. Wrong polarity can damage LED modules with no inverse-polarity protection.
- Wrong wiring of the LED driver can lead to malfunction or irreparable damage.
- To enhance the capability against mechanical stress (vibration), it is recommended to apply washers for the screws in installation.
- To avoid the damage of the Driver, the wiring must be protected against short circuits to earth (sharp edged metal parts, metal cable clips, louver, etc.).

3.4 Hot plug-in

Hot plug-in is not supported due to residual output voltage of > 0 V.
When connecting an LED load, restart the device to activate the LED output.
This can be done via mains reset or via interface (DALI, DSI, ready2mains).

3.5 Earth connection

The earth connection is conducted as function earth (FE). There is no earth connection required for the functionality of the LED driver. Earth connection is recommended to improve following behaviour:
- Electromagnetic interferences (EMI)
- LED glowing at standby
- Transmission of mains transients to the LED output

3.6 Installation note

Max. torque at the clamping screw: 0.5 Nm / M4

4. Electrical values

4.1 Operating window

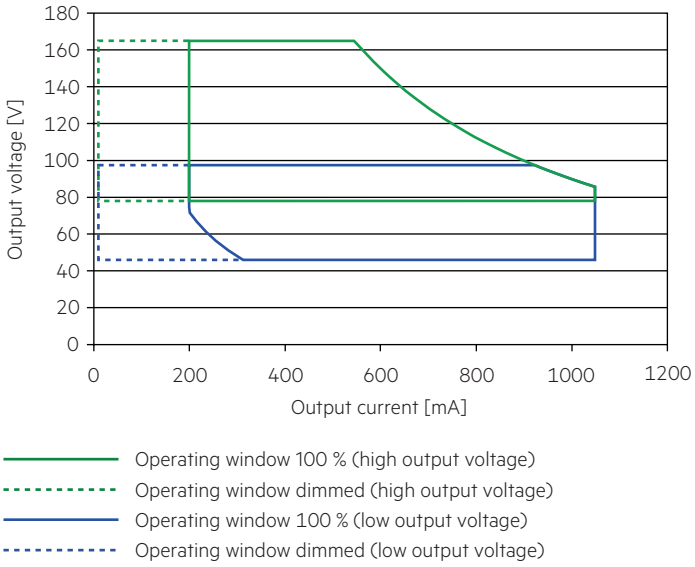

Make sure that the LED driver is operated within the given window under all operating conditions. Special attention needs to be paid at dimming and DC emergency operation as the forward voltage of the connected LED modules varies with the dimming level, due to the implemented amplitude dimming technology. Coming below the specified minimum output voltage of the LED driver may cause the device to shut-down.
See chapter “6.6 Light level in DC operation” for more information.

4.2 Efficiency vs load (HV)

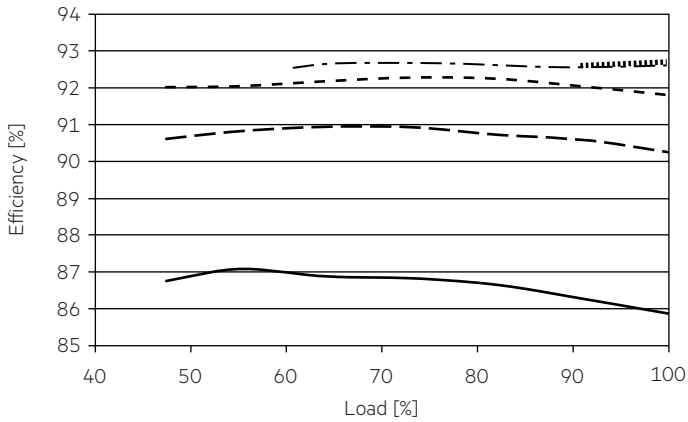

4.3 Power factor vs load (HV)

Valid for 87500717 until production date 3rd January 2024 and 28003162 until production date 29th February 2024:

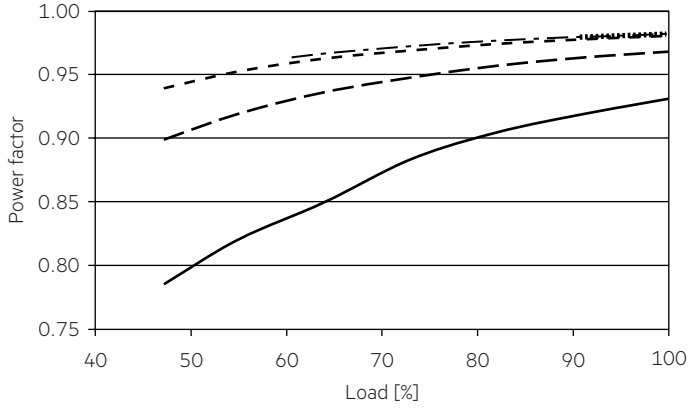

Valid for 87500717 from production date 4th January 2024 and 28003162 from production date 1st March 2024:

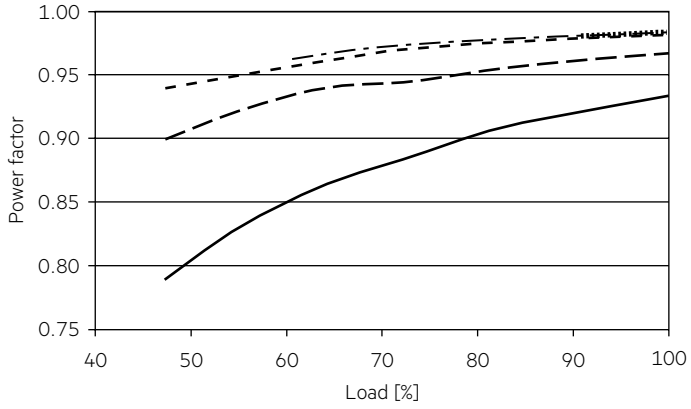

4.4 THD vs load (HV)

Valid for 87500717 until production date 3rd January 2024 and 28003162 until production date 29th February 2024:

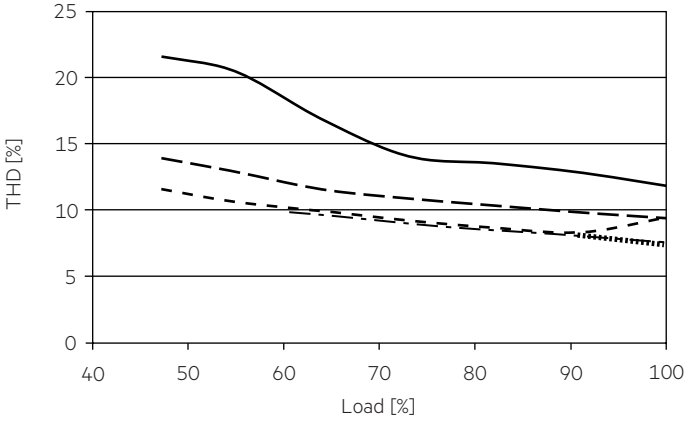

Valid for 87500717 from production date 4th January 2024 and 28003162 from production date 1st March 2024:

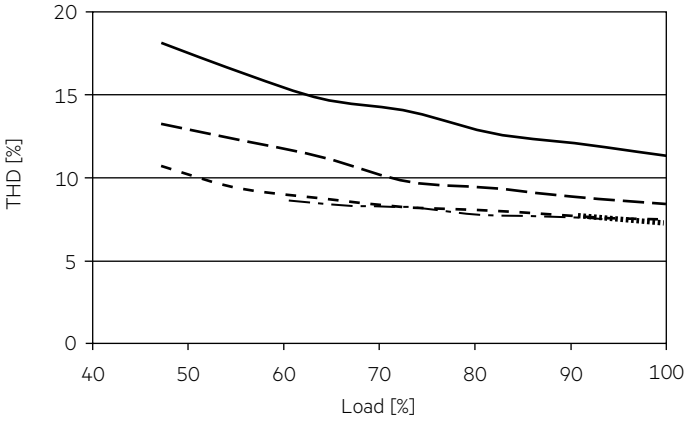

4.5 Efficiency vs load (LV)

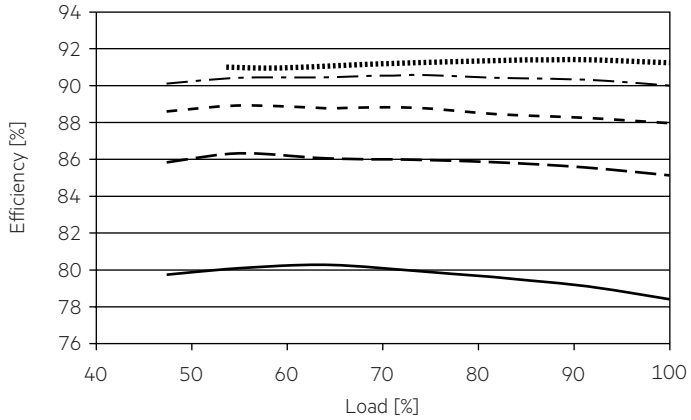

4.6 Power factor vs load (LV)

Valid for 87500717 until production date 3rd January 2024 and 28003162 until production date 29th February 2024:

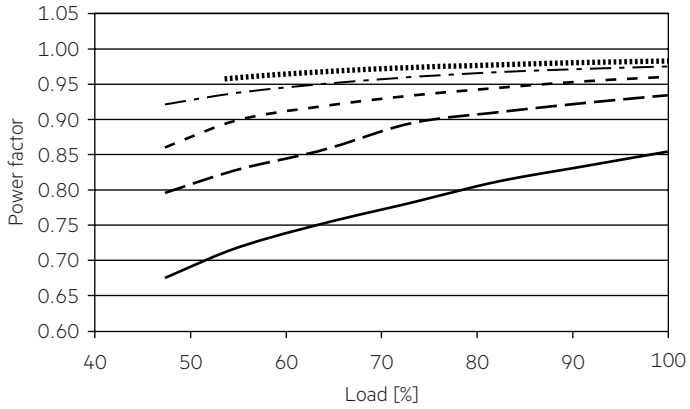

Valid for 87500717 from production date 4th January 2024 and 28003162 from production date 1st March 2024:

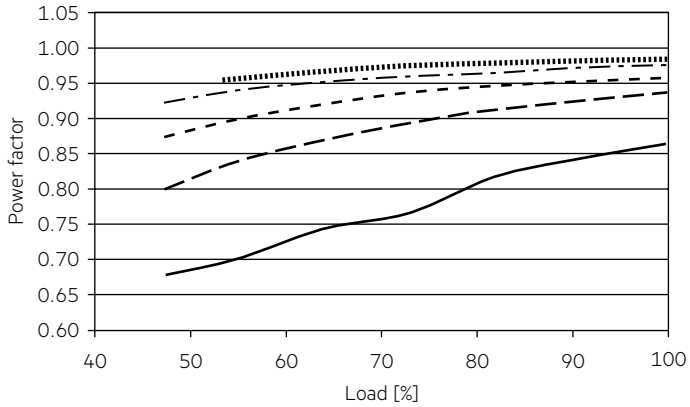

4.7 THD vs load (LV)

Valid for 87500717 until production date 3rd January 2024 and 28003162 until production date 29th February 2024:

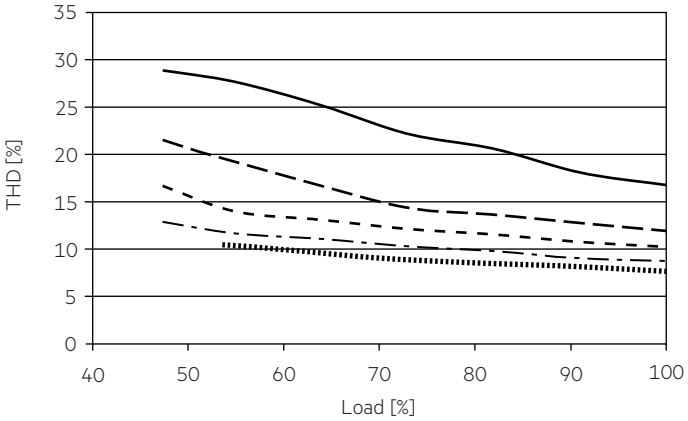

Valid for 87500717 from production date 4th January 2024 and 28003162 from production date 1st March 2024:

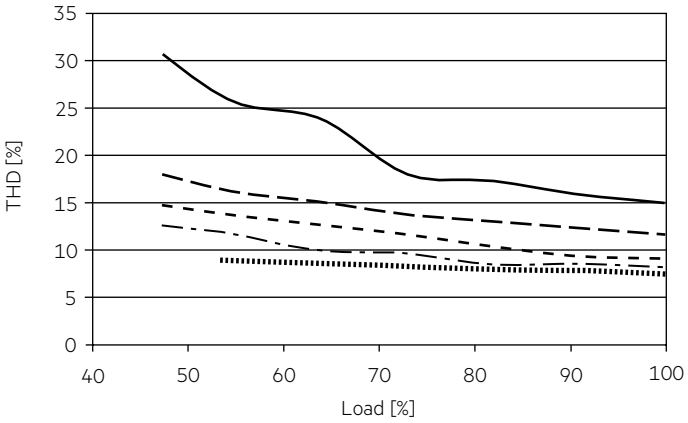

200 mA
350 mA
500 mA
700 mA
1050 mA

100 % load corresponds to the max. output power (full load) according to the table "Specific technical data".

4.8 Maximum loading of automatic circuit breakers in relation to inrush current

Automatic circuit breaker type	C10	C13	C16	C20	B10	B13	B16	B20	Inrush current	
Installation Ø	1.5 mm²	1.5 mm²	2.5 mm²	4 mm²	1.5 mm²	1.5 mm²	2.5 mm²	4 mm²	I_{max}	time
LCO 90/200-1050/165 o4a NF C EXC3	10	13	17	22	6	8	10	13	41.6 A	238 µs

These are max. values calculated out of inrush current! Please consider not to exceed the maximum rated continuous current of the circuit breaker.
Calculation uses typical values from ABB series S200 as a reference.
Actual values may differ due to used circuit breaker types and installation environment.

4.9 Harmonic distortion in the mains supply (at 230 V / 50 Hz and full load) in %

	THD	3.	5.	7.	9.	11.
LCO 90/200-1050/165 o4a NF C EXC3	< 10	< 8	< 3	< 3	< 2	< 2

5. Software / Programming / Interfaces

5.1 Software / programming

With appropriate software and interface different functions can be activated and various parameters can be configured in the LED driver.
The Driver supports the following software and interfaces:

Software / hardware for configuration:
- companionSUITE (deviceGENERATOR, deviceCONFIGURATOR, deviceANALYSER)
- masterCONFIGURATOR
- ready2mains Programmer

Interfaces for data transfer:
- NFC
- Control input DALI
- Control input switchDIM
- Control input ready2mains
- U6Me2

5.2 Nearfield communication (NFC)

The NFC Interface allows wireless communication with the LED driver.
This interface offers the option to write configuration and to read configuration, errors and events with the companionSUITE.
A correct communication between the LED driver and the NFC antenna can only be guaranteed if the antenna is placed directly on the Driver.
Any material placed between the LED driver and the NFC antenna can cause a deterioration of the communication quality.
After programming the device via NFC power up the device one time for one second till the deviceANALYSER can read out the parameters.
We recommend the use of following NFC antenna:
www.tridonic.com/nfc-readers

NFC is complied with ISO/IEC 15963 standard.

5.3 Control input DALI

The control input is non-polar for digital control signals (DALI, DSI).
The control signal is not SELV. The control cable has to be installed in accordance to the requirements of low voltage installations.

Digital control with:
- DSI signal: 8 bit
- DALI signal: 16 bit

Dimming is realized by amplitude dimming.

5.4 Control Input switchDIM

A standard pushbutton (switchDIM) can be wired on the terminals (DA/N and DA/L).
Integrated switchDIM function allows a direct connection of a pushbutton for dimming and switching.
Brief push (< 0.6 s) switches LED driver ON and OFF. The dimm level is saved at power-down and restored at power-up.
When the pushbutton is held, LED modules are dimmed. After repush the LED modules are dimmed in the opposite direction.
In installations with LED drivers with different dimming levels or opposite dimming directions (e.g. after a system extension), all LED drivers can be synchronized to 50 % dimming level by a 10 s push.
Use of pushbutton with indicator lamp is not permitted.

5.5 Control input ready2mains (L, N)

The digital ready2mains protocol is modulated onto the mains signal which is wired to the mains terminal (L and N).

The configuration is done via the ready2mains Programmer, either directly at the Programmer itself or via a respective software tool. For details on the configuration via ready2mains see the technical information of the Programmer and its tools.
Following tools can be used:
- deviceCONFIGURATOR (companionSUITE)
- masterCONFIGURATOR
- ready2mains Programmer

5.6 U6Me2

Settings of chronoSTEP function could be done via switching mains commands.
For detailed description for timings and intervals see product manual.

Key features:
- Auto-dimming with 8 sequences
- Every sequence can hold 8 parameter pairs
- Separate dim-level for each time parameter
- Various commands + parameter for extensions

6. Functions

⊙ companionSUITE:
DALI-USB, ready2mains Programmer, NFC
The companionSUITE with deviceGENERATOR, deviceCONFIGURATOR and deviceANALYSER is available via our WEB page:
https://www.tridonic.com/com/en/products/companionsuite.asp

◈ masterCONFIGURATOR:
DALI-USB, ready2mains Programmer (in DALI mode)
The masterCONFIGURATOR is available via our WEB page:
https://www.tridonic.com/com/en/software-masterconfigurator.asp

Icon	Function	NFC	DALI-2	ready2mains	U6Me2
	OEM Identification	⊙	⊙ ◈	⊙	–
	OEM GTIN	⊙	⊙ ◈	⊙	–
	LED current	⊙	⊙ ◈	⊙	–
	Device operating mode	⊙	⊙ ◈	⊙	⊙
	corridorFUNCTION	⊙	⊙ ◈	⊙	–
	chronoSTEP	⊙	⊙ ◈	–	⊙
	External temperature management (ETM + NTC)	⊙	⊙ ◈	⊙	–
	Enhanced constant light output (eCLO)	⊙	⊙ ◈	⊙	–
	DC level	⊙	⊙ ◈	⊙	–
	Enhanced power on level (ePOL)	⊙	⊙ ◈	⊙	–
	Intelligent temperature guard (ITG)	⊙	⊙ ◈	⊙	–
	DALI default parameters	⊙	⊙ ◈	–	–
	Scenes and groups	⊙	⊙ ◈	–	–
	inputDIM	⊙	⊙ ◈	⊙	–
	Customer memory bank	⊙	⊙ –	–	–
	Energy reports	⊙	⊙ –	–	–
	Diagnostic and monitoring	⊙	⊙ –	–	–

6.1 LED current

The LED output current must be adapted to the connected LED module. The value is limited by the current range of the respective device.

The priority for current adjustment methods is NFC / DALI (highest priority) and ready2mains (lowest priority).

6.2 corridorFUNCTION

A motion detector (corridorFUNCTION) can be wired on the terminals (DA/N and DA/L).
With the corridorFUNCTION and a commercially available motion detector, it is easy to adapt the lighting in one area to its use.
That is, when the area is entered by a person, the lighting dims instantly to a certain brightness and is available in desired strength.
After the area is left by the person, the brightness dims slowly to a smaller value or switches off completely.
The individual parameters of the desired profile, such as brightness values or delay times, can be adjusted flexibly and individually.

To activate the corridorFUNCTION without using software a voltage of 230 V has to be applied at the DA/N and DA/L connection.
The unit will then switch automatically to the corridorFUNCTION.

corridorFUNCTION is a very simple tool for controlling gears with conventional pushbuttons or motion sensors.
To ensure correct operation a sinusoidal mains voltage with a frequency of 50 Hz or 60 Hz is required at the control input.
Special attention must be paid to achieving clear zero crossings.
Serious mains faults may impair the operation of corridorFUNCTION.

Note:
By using corridorFUNCTION programming and monitoring via DALI is always possible.

6.3 chronoSTEP (Virtual Midnight)

In the outdoor lighting and street lighting sector it often makes sense to dim the lighting level during night hours in order to save energy.
The chronoSTEP function is a tool that makes this easy to do.
The device automatically measures the switch-on and switch-off times of the lighting installation over the past three days.
The switch-on and switch-off times are typically the times at which the sun sets and rises. The midpoint of these two reference points is the time referred to as Virtual Midnight. The overall time interval between switch-on and switch-off points is called On Time.

Notice
Overall there are 8 profiles, 5 are predefined by factory and 3 can be programmed by the customer.
When calculating the On-Time, only values between 4 and 24 hours are counted. Values less than 4 hours could indicate a power failure and are therefore not saved. For settings longer than 24 hours, 24 hours is saved as the maximum possible value.

6.4 External temperature management (ETM + NTC)

ETM protects the LED module against thermal overstress.
An external temperature sensor (NTC) detects the LED module temperature and the LED driver will limit the output current according to this temperature:

If the temperature is between the limits T1 (normal condition) and T2 (overload), the LED output current will be decreased.
If the temperature exceeds the limit T3 (critical temperature), the device will switch to the shutdown level.
The shutdown level will be active until the module temperature decreases below T1 or until the LED driver is restarted (switch off or mains reset).

The LED module's temperature is only measured if the output is active (lamp is on).

The allowed NTC resistor value is between 0 to 2 MΩ.
By default there are three predefined values that can be set via programming software, up to five individual values can be added.

6.5 Enhanced Constant Light Output (eCLO)

With this function the light output of the LED module can be kept equal over the lifetime.
The light output of an LED module reduces over the course of its lifetime. The Constant Light Output (eCLO) function compensates for this natural decline by constantly increasing the output current of the LED driver throughout its lifetime.
Enhanced eCLO shall be achieved by limitation of the LED current at the commissioning of the LED driver and providing a linear interpolation of the current over the time, depending on the data points given by the user. The user has to insert up to eight pairs of data (time, level). The output curve is the result of connecting the user data points linear. Detailed description for eCLO see product manual.

6.6 Light level in DC operation

In emergency light systems with a central battery supply the DC recognition function uses the input voltage to detect if emergency mode is present.
The LED driver then automatically switches to DC mode and dims the light to the defined DC level.
Without DC recognition different and more complex solutions would have to be applied in order to detect emergency mode.
DC recognition is integrated in the device as standard.
No additional commissioning is necessary for activation.

This is a safety-relevant parameter.
The setting is relevant for the dimensioning of the central battery system.

The LED driver is designed to operate on DC voltage and pulsed DC voltage. For a reliable operation, make sure that also in DC emergency operation the LED driver is run within the specified conditions as stated in chapter "4.1 operating window".

Light output level in DC operation: programmable 5 – 100 %
(factory default = 15 %, EOF_i = 0.13).

The voltage-dependent input current of Driver incl. LED module is depending on the used load.

The voltage-dependent no-load current of Driver (without or defect LED module) is for:
AC: < 30 mA
DC: < 4 mA

In DC operation dimming mode can be activated.
If Dimming on DC is activated the requirements of the DC recognition function are ignored.
Even if DC is detected, the LED driver continues to behave as in AC mode

- The present dimming level is retained
- An emergency light level defined for the DC recognition function (DC level) is ignored
- Control signals via DALI und DSI continue to be executed

If Dimming on DC is activated then emergency mode is not recognised.
The device no longer automatically switches to the emergency light level.

6.7 Intelligent Temperature Guard (ITG)

The intelligent temperature guard protects the LED driver from thermal overheating by reducing the output power or switching off in case of operation above the thermal limits of the luminaire or ballast.
Depending on the luminaire design, the ITG operates at about 5 to 10 °C above tc temperature.

If temperature threshold values are exceeded, the LED output current is limited.
These limits can be adjusted using the programming software.
Even the current ITG temperature in the device can be read out. With this function, the sensitivity of the temperature control can be adjusted.

6.8 inputDIM

Dimming with varation of mains voltage between 170 and 250 V AC.
With appropriate software the max. / min. dimming level can be set.
The associated voltage for the max. / min. dimming level can be set individually within the voltage range stated above.
Input voltage regulation (IVG+) has higher priority than inputDIM.
If min. dimming level set by inputDIM function is higher than max. allowed dimming level of input voltage regulation (IVG+) the value of IVG+ has priority.

Example:

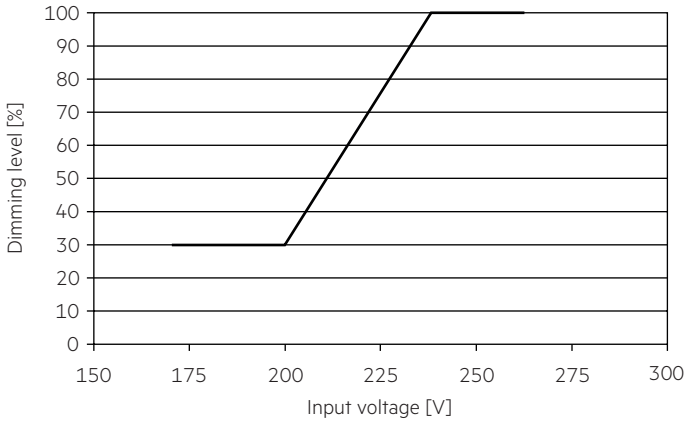

6.9 Power-up fading

The power-up function offers the opportunity to modify the on behavior.
The time for fading on can be adjusted in a range of 0.2 to 16 seconds.
According to this value, the device dims either from 0 % up to the power-on level.
By factory default no fading time is set (= 0 seconds).

6.10 Memory bank 1 extension

This function provides an extension to memory bank 1 to enable asset management functionality.
Several internal values from the driver could be read out from this memory bank.
For example luminaire year, week and description.
Also power levels, AC mains voltages and light output can be read out.

6.11 Energy reporting

This function provides the information related to energy reporting accessible through memory banks in this driver.
Several functions and values could be read out to gain access in Content management systems.
Report and values for Active power, Active Energy and many more can be read out.

6.12 Diagnostics & Maintenance

This function provides the information related to diagnostics and maintenance information accessible through memory banks.
Several functions and values could be read out to gain access in Content management systems.
Report and values for failure behaviour, driver conditions and malfunctions trigger points can be read out.

Note for chapter 6.10 to 6.12:
Accuracy of readout measured values is ±10 % running the device in HV mode within a load range of 50 – 100 %. Running the device in other load range or in LV mode results in not useable values.

7. Protective features

7.1 Overtemperature protection

The LED driver is protected against temporary thermal overheating.
If the temperature limit is exceeded the output current of the LED module(s) is reduced. The temperature protection is activated above tc max.
The activation temperature differs depending on the LED load.
On DC operation this function is deactivated to fulfill emergency requirements.

7.2 Short-circuit behaviour

In case of a short-circuit at the LED output the LED output is switched off. After restart of the LED driver the output will be activated again. The restart can either be done via mains reset or via interface (DALI, DSI, ready2mains).

7.3 No-load operation

The LED driver will not be damaged in no-load operation. The output will be deactivated and is therefore free of voltage. If a LED load is connected, the device has to be restarted before the output will be activated again.

7.4 Overload protection

If the maximum load is exceeded by a defined internal limit, the LED driver turns off the LED output. After restart of the LED driver the output will be activated again.
The restart can either be done via mains reset or via interface (DALI, DSI, ready2mains).

7.5 IVG+ – Intelligent Voltage Guard Plus

In some cases mains voltage is not stabilized and has some voltage peaks which are lower or higher than the nominal voltage range.
Between 192 V and 80 V input voltage, the LED driver operates in under-voltage mode and dims the secondary side linearly down to 10 %.
Below 80 V input voltage, the LED driver shuts down, restarts at 90 V (without a reset) and dims linearly up back to 100 %. Above 280 V input voltage, the LED driver shuts down. If input voltage drops below 270 V, the LED driver restarts (without a reset).
Input Voltage Guard Plus (IVG+) has a higher priority than inputDIM.

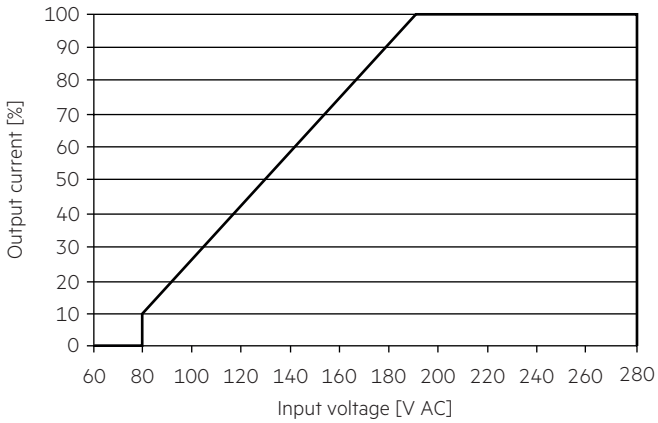

7.6 Insulation between terminals

Insulation	Mains	FE	NTC / LED	DALI
Mains	–	double	double	basic
FE	double	–	basic	double
NTC / LED	double	basic	–	double
DALI	basic	double	double	–

basic ... represents basic insulation.
double ... represents double or reinforced insulation.

8. Miscellaneous

8.1 Insulation and electric strength testing of luminaires

Electronic devices can be damaged by high voltage. This has to be considered during the routine testing of the luminaires in production.

According to IEC 60598-1 Annex Q (informative only!) or ENEC 303-Annex A, each luminaire should be submitted to an insulation test with 500 V DC for 1 second. This test voltage should be connected between the interconnected phase and neutral terminals and the earth terminal.
The insulation resistance must be at least 2 MΩ.

As an alternative, IEC 60598-1 Annex Q describes a test of the electrical strength with 1500 V AC (or 1.414 x 1500 V DC). To avoid damage to the electronic devices this test must not be conducted.

The equipotential terminal is used to connect the heat sink and the LED driver to reduce transients.

8.2 Conditions of storage and use

Humidity:	5 % up to max. 85 %, not condensed (max. 56 days/year at 85 %)
Storage temperature:	-40 °C up to max. +80 °C

The devices have to be acclimatised to the specified temperature range (ta) before they can be operated.

The LED driver is declared as inbuilt LED controlgear, meaning it is intended to be used within a luminaire enclosure.
If the product is used outside a luminaire, the installation must provide suitable protection for people and environment (e.g. in illuminated ceilings).

8.3 Maximum number of switching cycles

All LED driver are tested with 50,000 switching cycles.
The actually achieved number of switching cycles is significantly higher.

8.4 Additional information

Additional technical information at www.tridonic.com → Technical Data

Lifetime declarations are informative and represent no warranty claim.
No warranty if device was opened.