TRIDONIC

Driver LC 20W 100-1050mA 44V o4a NF SR EXC3

excite series

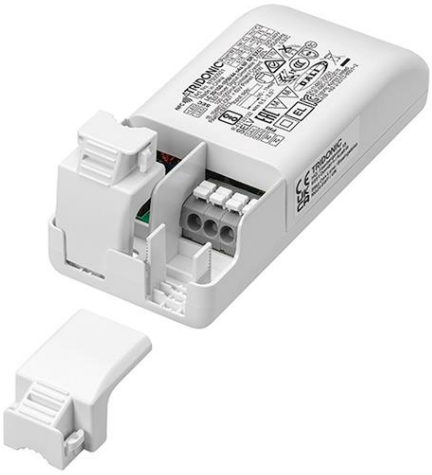

Product description
_ Independent constant current LED driver
_ Dimmable via DALI-2
_ Dimming range 1 to 100 % (min. 5 mA)
_ Output current adjustable between 100 – 1,050 mA with DALI or NFC
_ Max. output power 20 W
_ Up to 85 % efficiency
_ Power input on stand-by < 0.5 W
_ Nominal lifetime up to 100,000 h
_ 5 years guarantee (conditions at https://www.tridonic.com/manufacturer-guarantee-conditions)

Housing properties
_ Casing: polycarbonate, white
_ Type of protection IP20
_ Toolless mounting of strain relief

Interfaces
_ Near field communication (NFC)
_ one4all (DALI-2 DT 6, switchDIM, corridorFUNCTION V2)

Functions
_ Adjustable output current in 1-mA-steps (NFC, DALI-2)
_ Constant light output function (CLO)
_ Protective features (overtemperature, short-circuit, overload, no-load)
_ Surge protection voltage 1 kV (L – N)
_ Suitable for emergency escape lighting systems acc. to EN 50172
_ For cable cross-sections up to 2.5 mm²

Benefits
_ Flexible configuration via companionSUITE (NFC, DALI-2)
_ Application-oriented operating window for maximum compatibility
_ New strain relief concept – fast mounting and pre-assembled connection of the LED load possible

Typical applications
_ For applications in downlight and decorative luminaires

Website
http://www.tridonic.com/87500921

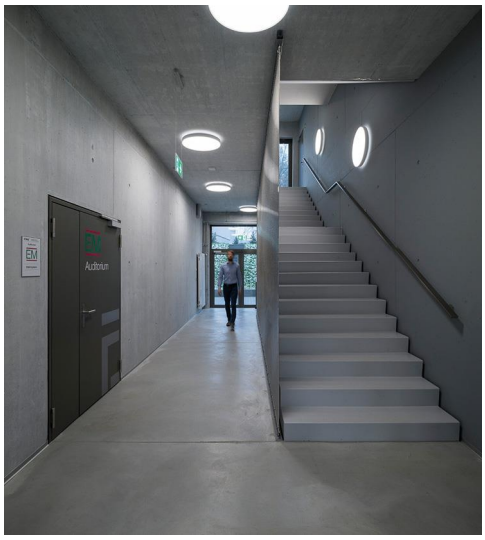

Driver LC 20W 100-1050mA 44V o4a NF SR EXC3

excite series

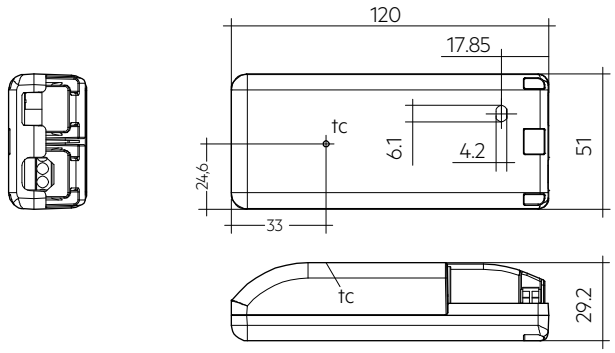

Ordering data

Type	Article number	Packaging, carton	Packaging, pallet	Packaging, high volume	Weight per pc.
LC 20/100-1050/44 o4a NF SR EXC3	**87500921**	10 pc(s).	130 pc(s).	2,080 pc(s).	0.104 kg

Technical data

Rated supply voltage	220 – 240 V
AC voltage range	198 – 264 V
DC voltage range	176 – 270 V
Mains frequency	0 / 50 / 60 Hz
Overvoltage protection	320 V AC, 48 h
Typ. rated current (at 230 V, 50 Hz, full load) ①②	112 mA
Typ. current (220 V, 0 Hz, full load, 100 % dimming level) ②	110 mA
Leakage current (at 230 V, 50 Hz, full load) ①②	< 700 µA
Max. input power	24.2 W
Typ. efficiency (at 230 V, 50 Hz, full load) ②	83.5 %
λ over full operating range (max.) ①	0.9C
λ over full operating range (min.)	0.3C
Typ. power consumption on stand-by ③	< 0.5 W
Typ. input current in no-load operation	< 25 mA
Typ. input power in no-load operation	0.9 W
In-rush current (peak / duration)	10 A / 80 µs
THD (at 230 V, 50 Hz, full load) ①	< 20 %
Starting time (at 230 V, 50 Hz, full load) ①	< 0.66 s
Starting time (DC mode)	< 0.4 s
Switchover time (AC/DC) ④	< 0.4 s
Turn off time (at 230 V, 50 Hz, full load)	< 0.2 s
Starting time (stand-by)	< 0.5 s
Output current tolerance ①⑤	± 5 %
Max. output current peak (non-repetitive) ⑥	≤ output current + 20 %
Output LF current ripple (< 120 Hz)	± 5 %
Output P_ST_LM (at full load)	≤ 1
Output SVM (at full load)	≤ 0.4
Max. output voltage (U-OUT)	60 V
Dimming range	1 – 100 % (min. 5 mA)
Mains surge capability (between L - N)	1 kV
Mains surge capability (between L/N - PE)	2 kV
Surge voltage at output side (against PE)	3 kV
Type of protection	IP20
Lifetime	up to 100,000 h
Guarantee (conditions at www.tridonic.com)	5 Year(s)
Dimensions L x W x H	120 x 51 x 29 mm

Approval marks

NFC DALI IP20 SELV 110 M M EL RoHS

Standards

EN 55015, EN 61000-3-2, EN 61000-3-3, EN 61000-4-4, EN 61000-4-5, EN 61347-1, EN 61347-2-13, EN 62384, EN 61547, EN 60598-1, EN 62386-101, EN 62386-102, EN 62386-207 (DALI-2), according to EN 50172, according to EN 60598-2-22

Specific technical data

Type	Output current⑤	Min. output voltage	Max. output voltage	Max. output power	Typ. power consumption (at 230 V, 50 Hz, full load)	Typ. current consumption (at 230 V, 50 Hz, full load)	tc point max.	Ambient temperature ta
Max. output power ≤ 18 W								
LC 20/100-1050/44 o4a NF SR EXC3	100 mA	15.0 V	44.0 V	4.4 W	6.7 W	44 mA	75 °C	-20 … +50 °C
LC 20/100-1050/44 o4a NF SR EXC3	200 mA	7.5 V	44.0 V	8.8 W	11.2 W	61 mA	75 °C	-20 … +50 °C
LC 20/100-1050/44 o4a NF SR EXC3	300 mA	7.0 V	44.0 V	13.2 W	15.9 W	79 mA	75 °C	-20 … +50 °C
LC 20/100-1050/44 o4a NF SR EXC3	400 mA	7.0 V	44.0 V	17.6 W	20.6 W	97 mA	75 °C	-20 … +50 °C
LC 20/100-1050/44 o4a NF SR EXC3	500 mA	7.0 V	36.0 V	18.0 W	21.1 W	100 mA	75 °C	-20 … +50 °C
LC 20/100-1050/44 o4a NF SR EXC3	600 mA	7.0 V	30.2 V	18.1 W	21.3 W	100 mA	75 °C	-20 … +50 °C
LC 20/100-1050/44 o4a NF SR EXC3	700 mA	7.0 V	25.8 V	18.1 W	21.4 W	100 mA	75 °C	-20 … +50 °C
LC 20/100-1050/44 o4a NF SR EXC3	800 mA	7.0 V	22.6 V	18.1 W	21.4 W	100 mA	75 °C	-20 … +50 °C
LC 20/100-1050/44 o4a NF SR EXC3	900 mA	7.0 V	20.0 V	18.1 W	21.3 W	100 mA	75 °C	-20 … +50 °C
LC 20/100-1050/44 o4a NF SR EXC3	1,050 mA	7.0 V	17.1 V	18.0 W	21.6 W	101 mA	75 °C	-20 … +50 °C
Max. output power > 18 W								
LC 20/100-1050/44 o4a NF SR EXC3	500 mA	36.0 V	40.0 V	20.0 W	23.3 W	108 mA	75 °C	-20 … +45 °C
LC 20/100-1050/44 o4a NF SR EXC3	600 mA	30.2 V	33.4 V	20.0 W	23.4 W	109 mA	75 °C	-20 … +45 °C
LC 20/100-1050/44 o4a NF SR EXC3	700 mA	25.8 V	28.5 V	20.0 W	23.3 W	108 mA	75 °C	-20 … +45 °C
LC 20/100-1050/44 o4a NF SR EXC3	800 mA	22.6 V	25.0 V	20.0 W	23.3 W	109 mA	75 °C	-20 … +45 °C
LC 20/100-1050/44 o4a NF SR EXC3	900 mA	20.0 V	22.2 V	20.0 W	23.6 W	110 mA	75 °C	-20 … +45 °C
LC 20/100-1050/44 o4a NF SR EXC3	1,050 mA	17.1 V	19.0 V	20.0 W	24.2 W	112 mA	75 °C	-20 … +45 °C

① Valid at 100 % dimming level.
② Depending on the selected output current.
③ Depending on the DALI traffic at the interface.
④ Valid for immediate change of power supply type otherwise the starting time is valid.
⑤ Output current is mean value.
⑥ For output current range 100 – 250 mA, max. output current peak (non-repetitive) ≤ 250 mA.

1. Standards

EN 55015
EN 61000-3-2
EN 61000-3-3
EN 61000-4-4
EN 61000-4-5
EN 61347-1
EN 61347-2-13
EN 62384
EN 61547
EN 60598-1
EN 62386-101 (DALI-2)
EN 62386-102 (DALI-2)
EN 62386-207 (DALI-2)
According to EN 50172 for use in central battery systems
According to EN 60598-2-22 suitable for emergency lighting installations

2. Thermal details and lifetime

2.1 Expected lifetime

Expected lifetime

Type	Load range	ta	40 °C	45 °C	50 °C
LC 20/100-1050/44 o4a NF SR EXC3	≤ 18 W	tc	65 °C	70 °C	75 °C
		Lifetime	> 100,000 h	75,000 h	50,000 h
	> 18 – 20 W	tc	70 °C	75 °C	X
		Lifetime	75,000 h	50,000 h	X

The LED driver is designed for a lifetime stated above under reference conditions and with a failure probability of less than 10 %.

The relation of tc to ta temperature depends also on the luminaire design.
If the measured tc temperature is approx. 5 K below tc max., ta temperature should be checked and eventually critical components (e.g. ELCAP) measured. Detailed information on request.

3. Installation / wiring

3.1 Circuit diagram

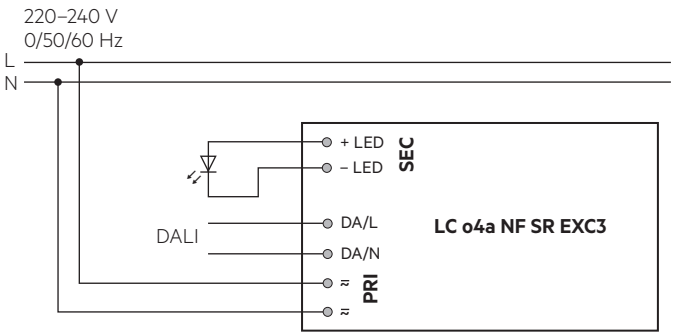

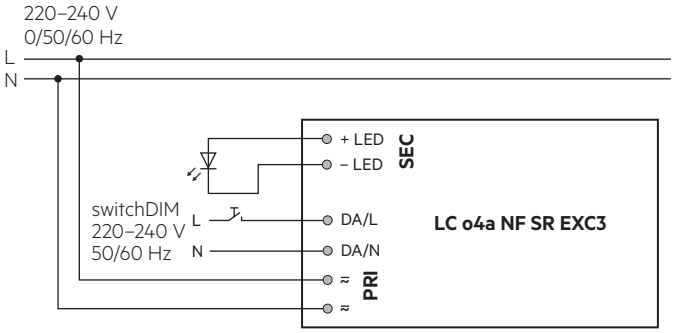

3.2 Wiring type and cross section

Mains supply wires
For wiring use stranded wire with ferrules or solid wire from 0.5–2.5 mm².
Strip 10–11 mm of insulation from the cables to ensure perfect operation of the push terminals.
Use one wire for each terminal connector only.
Use each strain relief channel for one cable only.

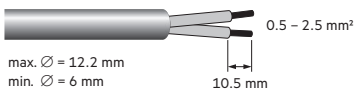

Secondary wires (LED module)
For wiring use stranded wire with ferrules or solid wire from 0.5–1.5 mm².
Strip 8.5–9.5 mm of insulation from the cables to ensure perfect operation of the push-wire terminals.
Use one wire for each terminal connector only.
Use each strain relief channel for one cable only.

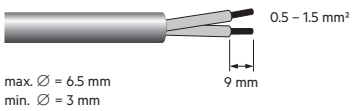

3.3 Loose wiring

Supply/DALI

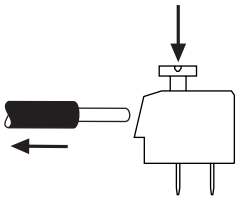

LED module

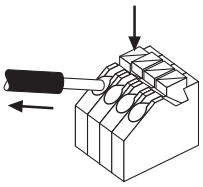

Press down the “push button” and remove the cable from front.

3.4 Mounting of strain relief

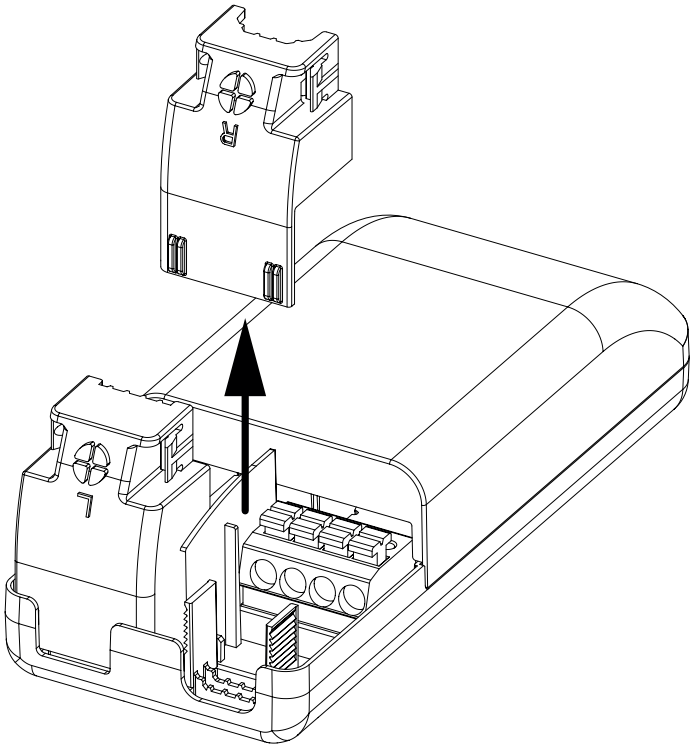

1. Loose strain relief elements from delivery position
2. Wiring the device
3. Push on strain relief element

3.5 Releasing the strain relief

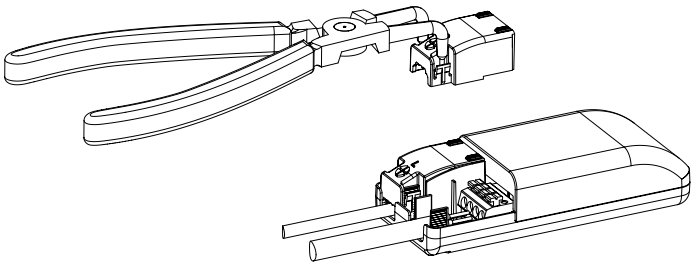

1. Insert release tool device into cut-out,
   e.g. KNIPEX 46 21 A21 Seeger ring pliers or screwdriver
2. Remove strain relief element

3.6 Fixing conditions

Dry, acidfree, oilfree, fatfree. It is not allowed to exceed the maximum ambient temperature (ta) stated on the device. Minimum distances stated below are recommendations and depend on the actual luminaire.
Device is not suitable for fixing in corner.

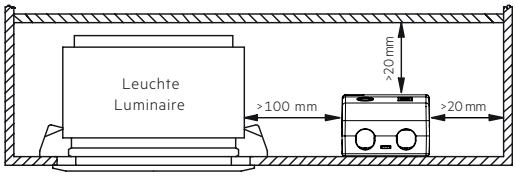

3.7 Wiring guidelines

- Run the secondary lines separately from the mains connections and lines to achieve good EMC performance.
- The max. secondary cable length is 2 m (4 m circuit).
- For good EMC performance, keep the LED wiring as short as possible.
- To comply with the EMC regulations run the secondary wires (LED module) in parallel.
- Secondary switching is not permitted.
- The LED driver has no inverse-polarity protection on the secondary side. Wrong polarity can damage LED modules with no inverse-polarity protection.
- Wrong wiring of the LED driver can lead to malfunction or irreparable damage.
- To avoid the damage of the Driver, the wiring must be protected against short circuits to earth (sharp edged metal parts, metal cable clips, louver, etc.).

3.8 Replace LED module

1. Mains off
2. Remove LED module
3. Wait for 10 seconds
4. Connect LED module again

Hot plug-in or secondary switching of LEDs is not permitted and may cause a very high current to the LEDs.

3.9 Installation note

Max. torque at the clamping screw: 0.5 Nm / M4

4. Electrical values

4.1 Operating window

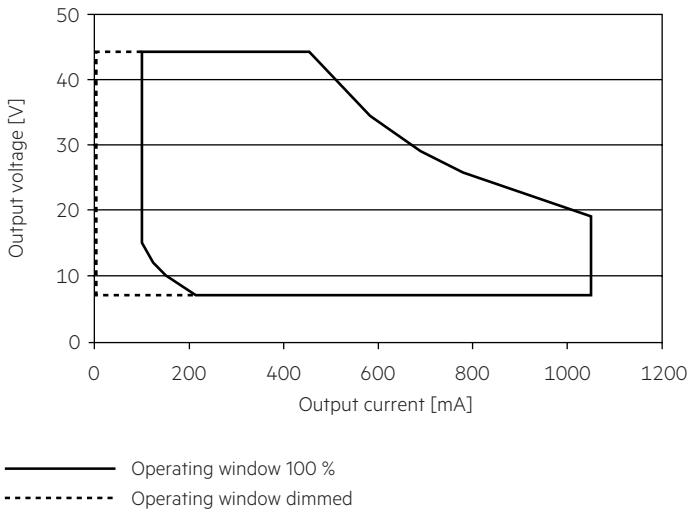

Make sure that the LED driver is operated within the given window under all operating conditions. Special attention needs to be paid at dimming and DC emergency operation as the forward voltage of the connected LED modules varies with the dimming level, due to the implemented amplitude dimming technology. Coming below the specified minimum output voltage of the LED driver may cause the device to shut-down.
See chapter “6.4 Light level in DC operation” for more information.

4.2 Efficiency vs load

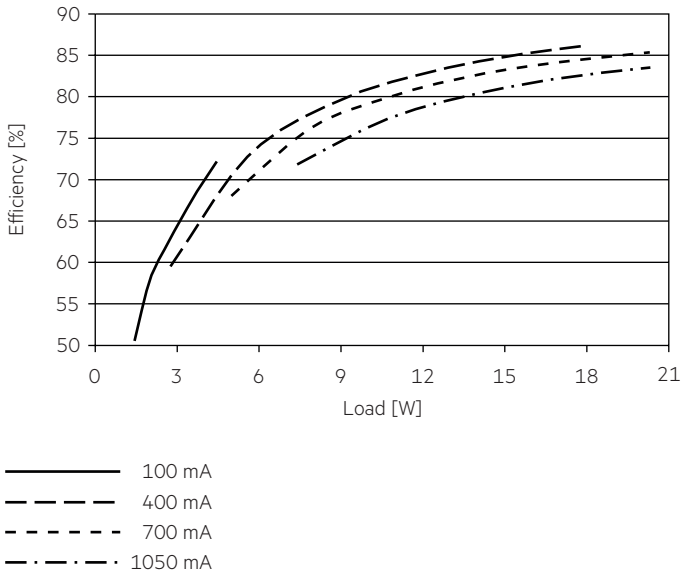

4.3 Power factor vs load

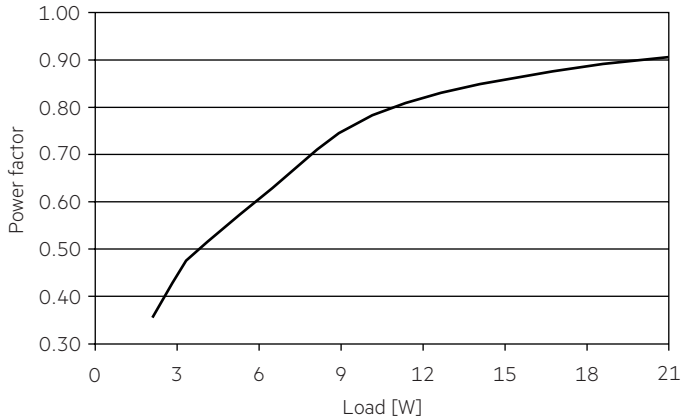

4.4 THD vs load

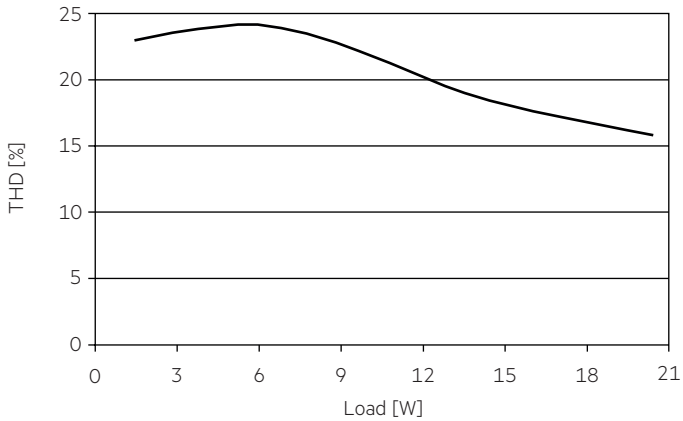

100 % load corresponds to the max. output power (full load) according to the table on page 2.

4.5 Maximum loading of automatic circuit breakers in relation to inrush current

Automatic circuit breaker type	C10	C13	C16	C20	B10	B13	B16	B20	Inrush current	
Installation Ø	1.5 mm²	1.5 mm²	2.5 mm²	2.5 mm²	1.5 mm²	1.5 mm²	2.5 mm²	2.5 mm²	I_{max}	time
LC 20/100-1050/44 o4a NF SR EXC3	70	91	112	140	70	91	112	140	10 A	80 µs

These are max. values calculated out of continuous current running the device on full load.
There is no limitation due to inrush current.
If load is smaller than full load for calculation only continuous current has to be considered.

4.6 Harmonic distortion in the mains supply (at 230 V / 50 Hz and full load) in %

	THD	3.	5.	7.	9.	11.
LC 20/100-1050/44 o4a NF SR EXC3	< 20	< 20	< 8	< 6	< 5	< 3

4.7 Insulation matrix

	Mains	Output	one4all
Mains	–	• •	•
Output	• •	–	• •
one4all	•	• •	–

• Represents basic insulation

• • Represents double or reinforced insulation

4.8 Dimming

Dimming range 1 % to 100 %
Digital control with:

- DALI signal: 16 bit Manchester Code
  Speed 10 % to 100 % in 0.2 s
  Programmable parameter:
  Minimum dimming level
  Maximum dimming level
  Default minimum = 1 %
  Programmable range 1 % ≤ MIN ≤ 100 %
  Default maximum = 100 %
  Programmable range 100 % ≥ MAX ≥ 1 %

Dimming curve is adapted to the eye sensitiveness.

4.9 Dimming characteristics

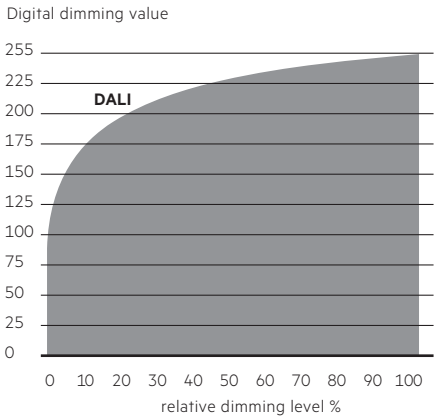

Dimming characteristics as seen by the human eye.

5. Software / Programming / Interfaces

5.1 Software / programming

With appropriate software and interface different functions can be activated and various parameters can be configured in the LED driver. The Driver supports the following software and interfaces:

Software / hardware for configuration:

- companionSUITE (deviceGENERATOR, deviceCONFIGURATOR, deviceANALYSER)
- masterCONFIGURATOR

Interfaces for data transfer:

- NFC
- Control input DALI
- Control input switchDIM

5.2 Nearfield communication (NFC)

The NFC Interface allows wireless communication with the LED driver. This interface offers the option to write configuration and to read configuration, errors and events with the companionSUITE.
A correct communication between the LED driver and the NFC antenna can only be guaranteed if the antenna is placed directly on the Driver.
Any material placed between the LED driver and the NFC antenna can cause a deterioration of the communication quality.
After programming the device via NFC power up the device one time for one second till the deviceANALYSER can read out the parameters.
We recommend the use of following NFC antenna:
www.tridonic.com/nfc-readers

NFC is complied with ISO/IEC 15963 standard.

5.3 Control input DALI

The control input is non-polar for digital control signals (DALI).
The control signal is not SELV. The control cable has to be installed in accordance to the requirements of low voltage installations.

Digital control with:

- DALI signal: 16 bit

Dimming is realized by amplitude dimming.

5.4 Control Input switchDIM

A standard pushbutton (switchDIM) can be wired on the terminals (DA/N and DA/L).
Integrated switchDIM function allows a direct connection of a pushbutton for dimming and switching.
Brief push (< 0.6 s) switches LED driver ON and OFF. The dimm level is saved at power-down and restored at power-up.
When the pushbutton is held, LED modules are dimmed. After repush the LED modules are dimmed in the opposite direction.
In installations with LED drivers with different dimming levels or opposite dimming directions (e.g. after a system extension), all LED drivers can be synchronized to 50 % dimming level by a 10 s push.
Use of pushbutton with indicator lamp is not permitted.

6. Functions

⊙ companionSUITE:
DALI-USB, NFC
The companionSUITE with deviceGENERATOR, deviceCONFIGURATOR and deviceANALYSER is available via our WEB page:
https://www.tridonic.com/com/en/products/companionsuite.asp

◈ masterCONFIGURATOR:
DALI-USB
The masterCONFIGURATOR is available via our WEB page:
https://www.tridonic.com/com/en/software-masterconfigurator.asp

Icon	Function	NFC	DALI-2
	Device operating mode	⊙	⊙ ◈
	Device reset command	⊙	–
	corridorFUNCTION	⊙	⊙ ◈
	Constant light output (CLO)	⊙	⊙ ◈
	DC Level	⊙	⊙ ◈
	LED current	⊙	⊙ ◈
	OEM Identification	⊙	⊙ ◈
	OEM GTIN	⊙	⊙ ◈
	Enhanced power on level (ePOL)	⊙	⊙ ◈
	DALI default parameters	⊙	⊙ ◈
	Scenes and groups	⊙	⊙ ◈
	Power up fading	⊙	⊙ ◈

6.1 LED current

The LED output current must be adapted to the connected LED module. The value is limited by the current range of the respective device.

The priority for current adjustment methods is NFC / DALI (highest priority).

Minimum output current is default.

6.2 corridorFUNCTION

A motion detector (corridorFUNCTION) can be wired on the terminals (DA/N and DA/L).
With the corridorFUNCTION and a commercially available motion detector, it is easy to adapt the lighting in one area to its use.
That is, when the area is entered by a person, the lighting dims instantly to a certain brightness and is available in desired strength.
After the area is left by the person, the brightness dims slowly to a smaller value or switches off completely.
The individual parameters of the desired profile, such as brightness values or delay times, can be adjusted flexibly and individually.

To activate the corridorFUNCTION without using software a voltage of 230 V has to be applied at the DA/N and DA/L connection.
The unit will then switch automatically to the corridorFUNCTION.

corridorFUNCTION is a very simple tool for controlling gears with conventional pushbuttons or motion sensors.
To ensure correct operation a sinusoidal mains voltage with a frequency of 50 Hz or 60 Hz is required at the control input.
Special attention must be paid to achieving clear zero crossings.
Serious mains faults may impair the operation of corridorFUNCTION.

Note:
By using corridorFUNCTION programming and monitoring via DALI is always possible.

6.3 Constant Light Output (CLO)

With this function the light output of the LED module can be kept equal over the lifetime.
The light output of an LED module reduces over the course of its lifetime.
The Constant Light Output (CLO) function compensates for this natural decline by constantly increasing the output current of the LED driver throughout its lifetime.
CLO shall be achieved by limitation of the LED current at the commissioning of the LED driver and providing a linear interpolation of the current over the time, depending on the data points given by the user.

6.4 Light level in DC operation

The LED driver is designed to operate on DC voltage and pulsed DC voltage. For a reliable operation, make sure that also in DC emergency operation the LED driver is run within the specified conditions as stated in chapter "4.1 operating window".

Light output level in DC operation is programmable (0; 1 – 100 %).
Default value is 100 % (EOFi = 0.95).

The voltage-dependent input current of Driver incl. LED module is depending on the used load.

The voltage-dependent no-load current of Driver (without or defect LED module) is for:
AC: < 25 mA
DC: < 7 mA

6.5 Power-up fading

The power-up function offers the opportunity to modify the on behavior.
The time for fading on can be adjusted in a range of 0.2 to 16 seconds.
According to this value, the device dims either from 0 % up to the power-on level.
By factory default no fading time is set (= 0 seconds).

7. Protective features

7.1 Short-circuit behaviour

In case of a short-circuit at the LED output the LED output is switched off. After restart of the LED driver the output will be activated again.
The restart can either be done via mains reset or via the DALI interface.

7.2 No-load operation

The LED driver will not be damaged in no-load operation. The output will be deactivated and is therefore free of voltage. When connecting an LED load, restart the device to activate the LED output.

7.3 Overload protection

If the maximum load is exceeded by a defined internal limit, the LED driver turns off the LED output. After restart of the LED driver the output will be activated again.
The restart can either be done via mains reset or via the DALI interface.

7.4 Overtemperature protection

The LED driver is protected against temporary thermal overheating.
If the temperature limit is exceeded the LED driver will switch off.
It restarts automatically.
The temperature protection is activated above tc max.
The activation temperature differs depending on the LED load.
On DC operation this function is deactivated to fulfill emergency requirements.

7.5 Insulation

The LED driver is double insulated.

8. Miscellaneous

8.1 Insulation and electric strength testing of luminaires

Electronic devices can be damaged by high voltage. This has to be considered during the routine testing of the luminaires in production.

According to IEC 60598-1 Annex Q (informative only!) or ENEC 303-Annex A, each luminaire should be submitted to an insulation test with 500 V DC for 1 second. This test voltage should be connected between the interconnected phase and neutral terminals and the earth terminal.
The insulation resistance must be at least 2 MΩ.

As an alternative, IEC 60598-1 Annex Q describes a test of the electrical strength with 1500 V AC (or 1.414 x 1500 V DC). To avoid damage to the electronic devices this test must not be conducted.

8.2 Conditions of use and storage

Humidity:	5 % up to max. 85 %, not condensed (max. 56 days/year at 85 %)
Storage temperature:	-40 °C up to max. +80 °C

The devices have to be acclimatised to the specified temperature range (ta) before they can be operated.

The LED driver is declared as inbuilt LED controlgear, meaning it is intended to be used within a luminaire enclosure.
If the product is used outside a luminaire, the installation must provide suitable protection for people and environment (e.g. in illuminated ceilings).

8.3 Additional information

Additional technical information at www.tridonic.com → Technical Data

Lifetime declarations are informative and represent no warranty claim.
No warranty if device was opened.