TRIDONIC

EM converterLED BASIC 200 V

Ausführung BASIC

Product description
_ Emergency lighting LED driver for manual testing
_ For self-contained emergency lighting
_ For LED modules with a forward voltage of 50 – 200 V
_ Low profile casing (21 x 30 mm cross-section)
_ For luminaire installation
_ 5 years guarantee (conditions at https://www.tridonic.com/manufacturer-guarantee-conditions)

Properties
_ Non maintained operation
_ 1 or 3 h rated duration
_ Operating time selectable with plug (duration link)
_ Compatible with all dimmable and non-dimmable constant current LED driver (see data sheet, LED driver compatibility)
_ 3-pole technology: 2-pole LED module changeover and delayed power switching for the LED driver
_ Automatic shutdown of output if LED load is out of range
_ Constant power output
_ Maximum light output for all LED modules
_ Electronic charge system
_ Deep discharge protection
_ Short-circuit-proof battery connection
_ Polarity reversal protection for battery

Batteries
_ High-temperature cells
_ NiCd or NiMH batteries
_ D, Cs or LA cells
_ 4 year design life
_ 1 year guarantee (conditions at https://www.tridonic.com/manufacturer-guarantee-conditions)
_ For battery compatibility refer to data sheet

Website
http://www.tridonic.com/

TRIDONIC

EM converterLED BASIC 200 V

Ausführung BASIC

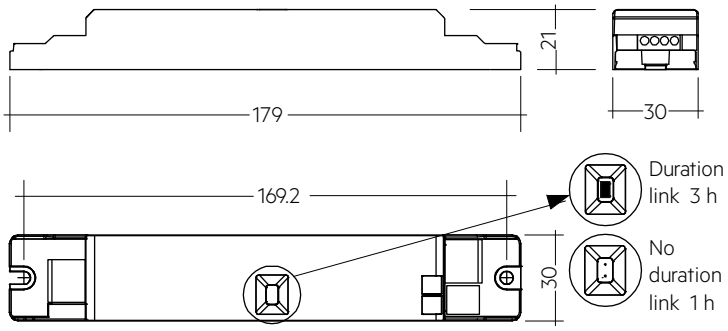

Note: Supply of control gear with duration link in 3 hours position. Remove duration link for duration of 1 h. Duration link must be set before battery and mains connection.

Approval marks

RoHS

Standards

according to EN 50172, according to EN 60598-2-22, EN 61347-2-13, EN 61347-2-7, EN 55015, EN 61000-3-2, EN 61000-3-3, EN 61547, EN 60068-2-64, EN 60068-2-29, EN 60068-2-30, EN 62384

Test switch EM3

Accessory

Product description
_ For connection to the emergency lighting unit
_ For checking the device function
_ Plug connection
_ Dielectric strength: 1,500 V AC for 60 seconds

Website
http://www.tridonic.com/89899956

Ordering data

Type	Article number	Packaging, bag	Packaging, carton	Weight per pc.
Test switch EM 3	**89899956**	25 pc(s).	200 pc(s).	0.01 kg

Approval marks

RoHS

Status indication green LED EM CON

Accessory

Product description
_ A green LED indicates that charging current is flowing into the battery
_ 0.3 / 1.0 m cable length
_ Plug connection

Website
http://www.tridonic.com/89800269

Ordering data

Type	Article number	Packaging, bag	Packaging, carton	Weight per pc.
LED EM green, 1.0 m CON	**89800269**	25 pc(s).	200 pc(s).	0.015 kg
LED EM green, HO 1.0 m CON	**89800271**	25 pc(s).	200 pc(s).	0.015 kg
LED EM green, 0.6 m CON	**89800472**	25 pc(s).	200 pc(s).	0.009 kg
LED EM green, HO 0.6 m CON	**89800473**	25 pc(s).	200 pc(s).	0.009 kg
LED EM green, 0.3 m CON	**89800270**	25 pc(s).	200 pc(s).	0.005 kg
LED EM green, HO 0.3 m CON	**89800272**	25 pc(s).	200 pc(s).	0.005 kg

1. Standards

- according to EN 50172
- according to EN 60598-2-22
- EN 61347-1
- EN 61347-2-13
- EN 61347-2-7
- EN 55015
- EN 61000-3-2
- EN 61000-3-3
- EN 61547
- EN 60068-2-64
- EN 60068-2-29
- EN 60068-2-30
- EN 62384

1.1 Glow-wire test

according to EN 61347-1 with increased temperature of 850 °C passed.

1.2 Isolation and electric strength testing of luminaires

Electronic LED-Drivers can be damaged by high voltage. This has to be considered during the routine testing of the luminaires in production.

According to IEC 60598-1 Annex Q (informative only!) or ENEC 303-Annex A, each luminaire should be submitted to an isolation test with 500 VDC for 1 second. This test voltage should be connected between the interconnected phase and neutral terminals and the earth terminal. The isolation resistance must be at least 2 MΩ.

As an alternative, IEC 60598-1 Annex Q describes a test of the electrical strength with 1,500 VAC (or 1,414 x 1,500 VDC). To avoid damage to the electronic devices this test **must not be conducted**.

2. Thermal details and life-time

2.1 Life-time

Average life-time 50,000 hours under rated conditions with a failure rate of less than 10 %. Average failure rate of 0.2 % per 1000 operating hours.

3. Installation / Wiring

3.1 Wiring diagram

One or more LED modules with a total forward voltage of 50 to 200 V can be connected to the EM converterLED 200V module. These LED module(s), marked with “Emergency” are operated in emergency mode from the associated battery. In normal mains mode all LED modules are operated by the mains LED Driver.

Use of the test switch:
For checking the device function press the test switch for a minimum of 3 seconds.

EM converterLED BASIC with one LED module for non-maintained emergency operation

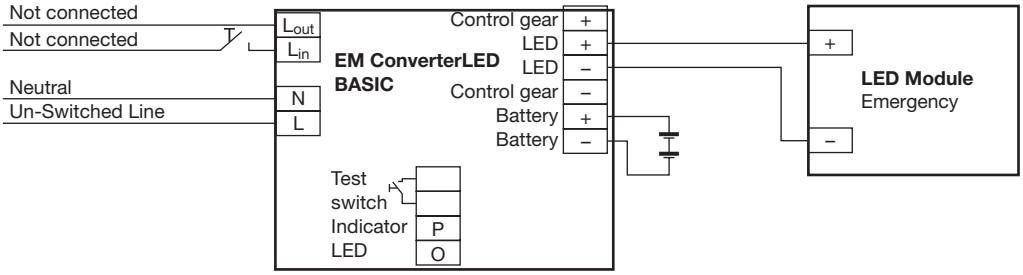

EM converterLED BASIC with a standard LED Driver and one LED module for mains and emergency operation

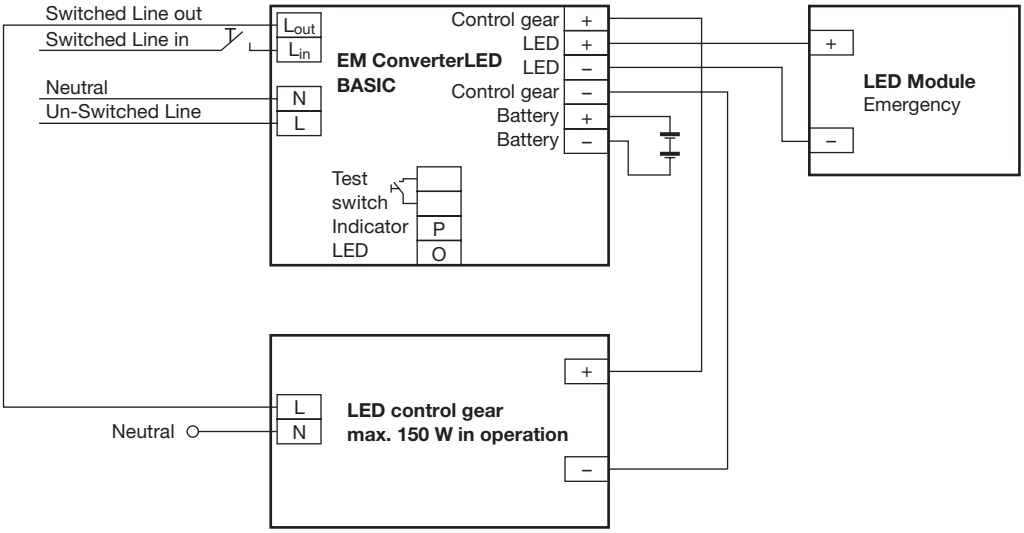

EM converterLED BASIC with a standard LED Driver and series operation of LED modules

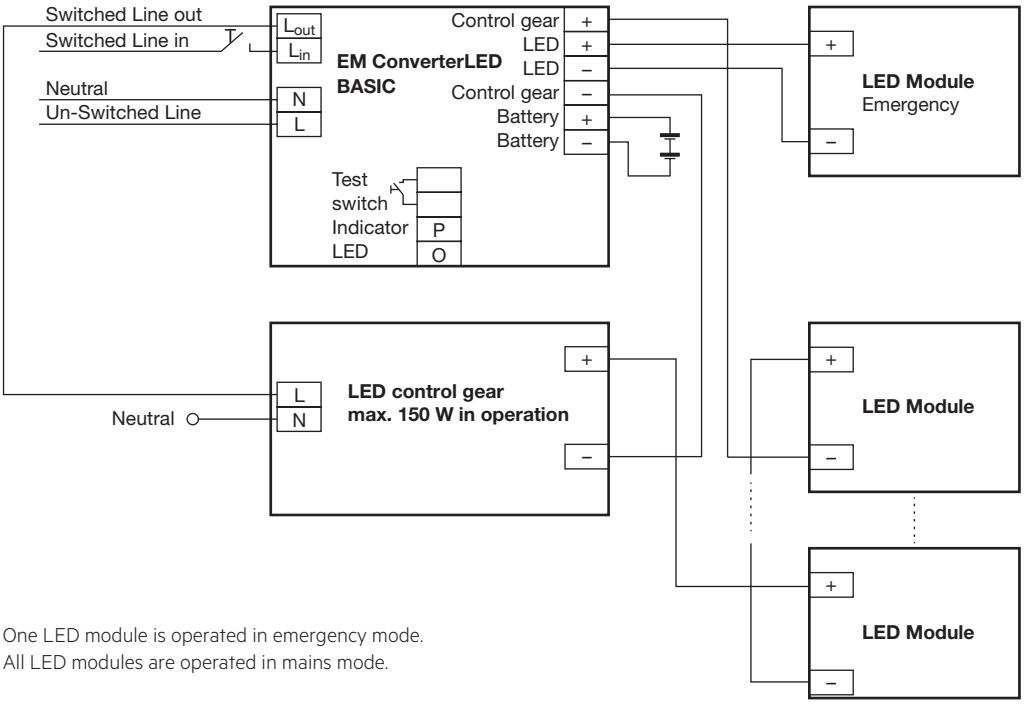

One LED module is operated in emergency mode.
All LED modules are operated in mains mode.

EM converterLED BASIC with a standard LED Driver and series operation of LED modules

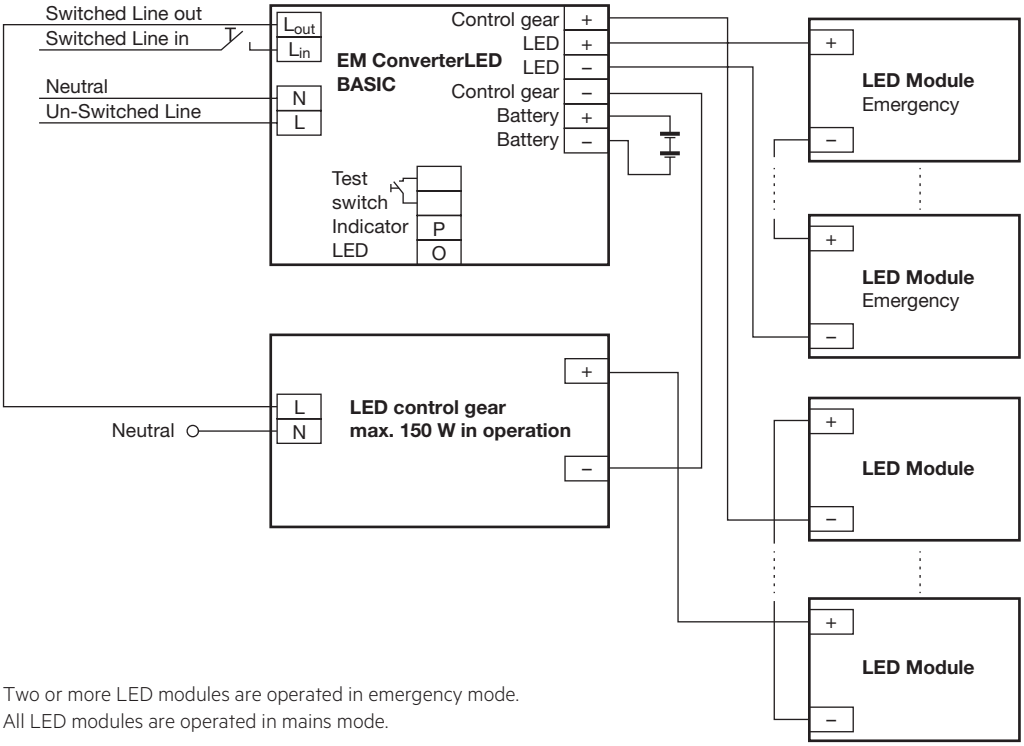

Two or more LED modules are operated in emergency mode.
All LED modules are operated in mains mode.

EM converterLED BASIC with a standard LED Driver and parallel operation of LED modules

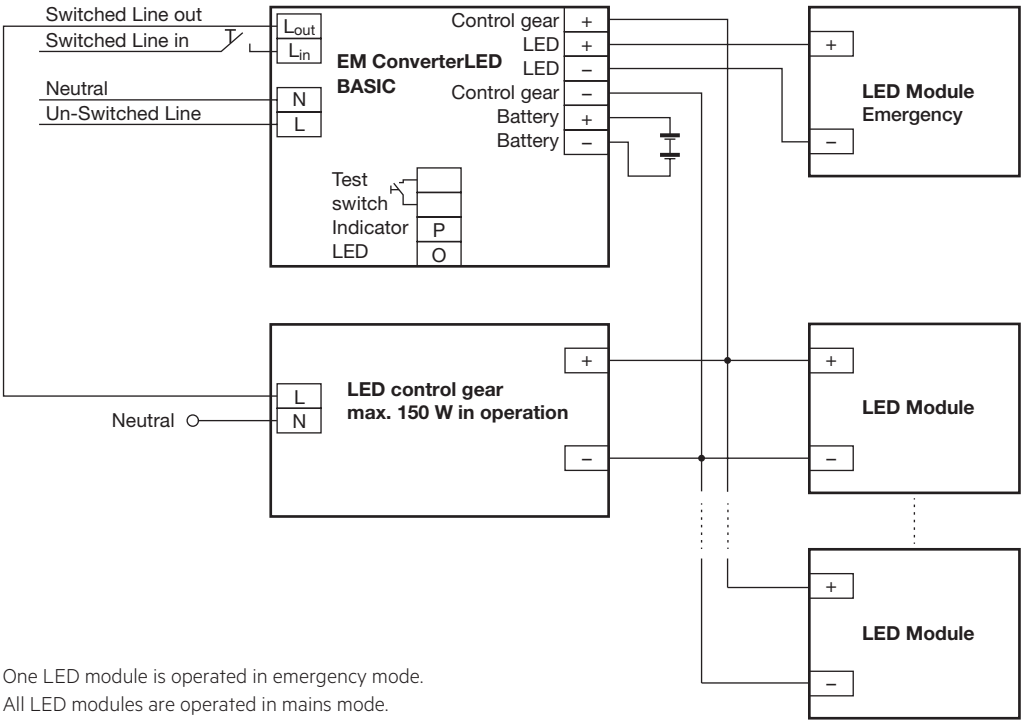

One LED module is operated in emergency mode.
All LED modules are operated in mains mode.

EM converterLED BASIC with a standard LED Driver and parallel operation of LED modules

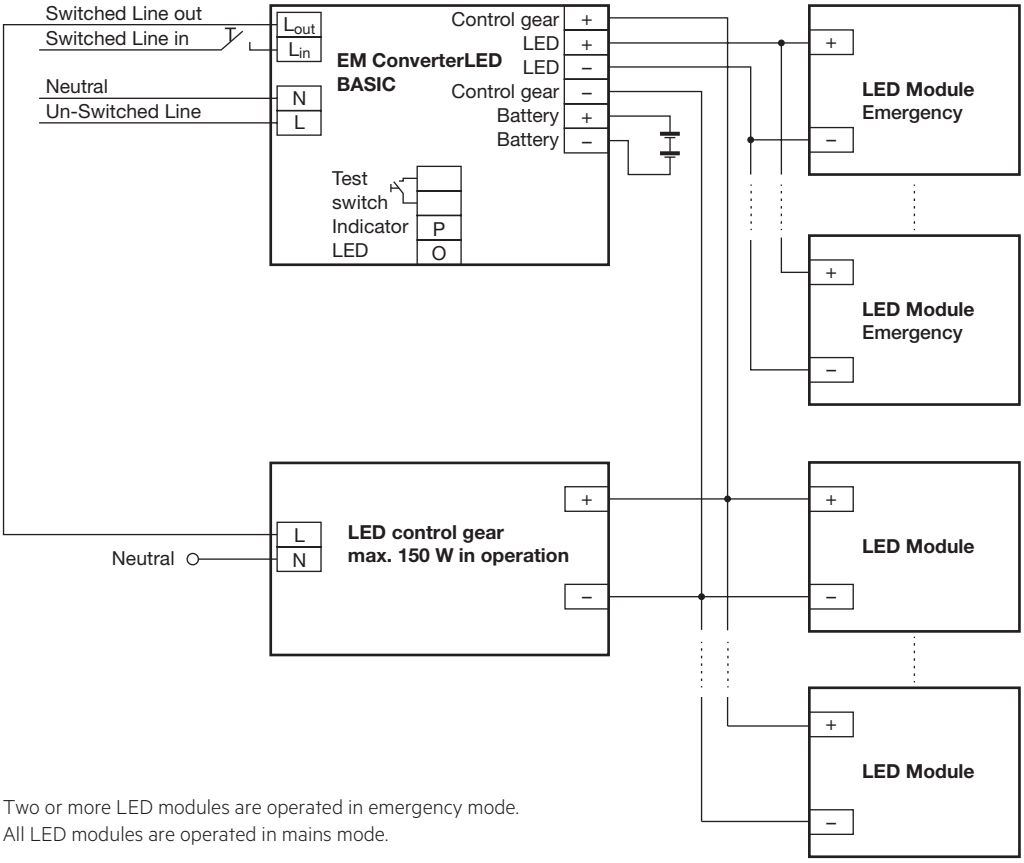

Two or more LED modules are operated in emergency mode.
All LED modules are operated in mains mode.

3.2 Wiring type and cross section

Solid wire with a cross section of 0.5 – 1.5 mm². Strip 8 – 9 mm of insulation from the cables to ensure perfect operation of terminals.

Wiring: LED module/LED Driver/supply

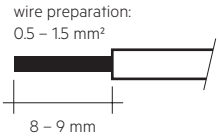

3.3 Loose wiring

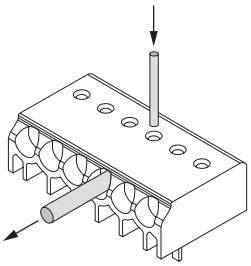

Loosen wire through twisting and pulling or using a Ø 1 mm release tool

3.4 Wiring guidelines

- The LED terminals, battery, indicator LED and test switch terminals are classified as SELV (output voltage < 120 V DC). Keep the wiring of the input terminals separated from the wiring of the SELV equivalent terminals or consider special wiring (double insulation, 6 mm creepage and clearance) when these connections should be kept SELV.
- The output to the LED is DC but has high frequency content, which should be considered for good EMC compliance.
- LED leads should be separated from the mains connections and wiring for good EMC performance.
- Maximum lead length on the LED terminals is 3 m. For a good EMC performance keep the LED wiring as short as possible.
- Maximum lead length for the Test switch and Indicator LED connection is 1 m. The test switch and Indicator LED wiring should be separated from the LED leads to prevent noise coupling.
- Battery leads are specified with 0.5 mm cross section and a length of 1.3 m
- To avoid the damage of the control gear, the wiring must be protected against short circuits to earth (sharp edged metal parts, metal cable clips, louver, etc.)

To ensure that a luminaire containing LED emergency units complies with EN 55015 for radio frequency conducted interference in both normal and emergency mode it is essential to follow good practice in the wiring layout.

Within the luminaire the switched and unswitched 50 Hz supply wiring must be routed as short as possible and be kept as far away as possible from the LED leads.Through wiring may affect the emc performance of the luminaire.

The length of LED leads must not be exceeded. Note that the length of the EM converterLED leads is added to the length of the leads from the LED Driver to the EM converterLED module when considering max. permitted lead length of the LED Driver.

3.5 Maximum lead length

LED	3 m[1]
Status indication LED	1 m
Batteries	1.3 m

[1] Note: The length of LED leads to the LED module must not be exceeded. Note that the length of the EM converterLED leads is added to the length of the leads from the LED Driver to the EM converterLED module when considering max. permitted lead length of the LED Driver. Leads should always be kept as short as possible.

3.6 Use of different phases

The use of different phases for switched line and unswitched line is allowed. When using different phases, the unswitched line must fail if the switched line fails. This is required to assure correct switching into emergency mode. It can be realised with a relay.

4. Mechanical values

4.1 Housing properties

Casing manufactured from polycarbonate.

4.2 Mechanical data accessories

LED status indicator
- Green
- Mounting hole 6.5 mm dia
- Lead length 0.3 m / 1.0 m
- Insulation rating: 90 °C
- Plug connection

Test switch
- Mounting hole 7.0 mm dia
- Lead length 0.55 m
- Plug connection

Battery leads
- Quantity: 1 red and 1 black
- Length: 1.3 m
- Wire type: 0.5 mm^2 solid conductor
- Insulation rating: 90 °C

Battery end termination
Push on 4.8 mm receptacle to suit battery spade fitted with insulating cover

Module end termination
8.0 mm stripped insulation

Two-piece batteries are supplied with a 200 mm lead with 4.8 mm receptacle at each end and insulting covers to connect the separate sticks together.

5. Electrical values

5.1 Maximum loading of automatic circuit breakers

Automatic circuit breaker type	B10	B13	B16	B20	C10	C13	C16	C20	Inrush current	
Installation Ø	1.5 mm²	1.5 mm²	1.5 mm²	2.5 mm²	1.5 mm²	1.5 mm²	1.5 mm²	2.5 mm²	I_{max}	time
EM converterLED 104 BASIC 200V	90	130	130	130	180	260	260	260	10 A	120 µs
EM converterLED 105 BASIC 200V	90	130	130	130	180	260	260	260	10 A	120 µs

5.2 Typ. LED current/voltage characteristics

The LED current in emergency mode is automatically adjusted by the EM converterLED module based on the total forward voltage of the LED modules connected and the associated battery.

EM converterLED BASIC 104 200V
Article number: 89800308
4.8 V battery voltage
750 – 960 mA battery discharge current (tolerance)

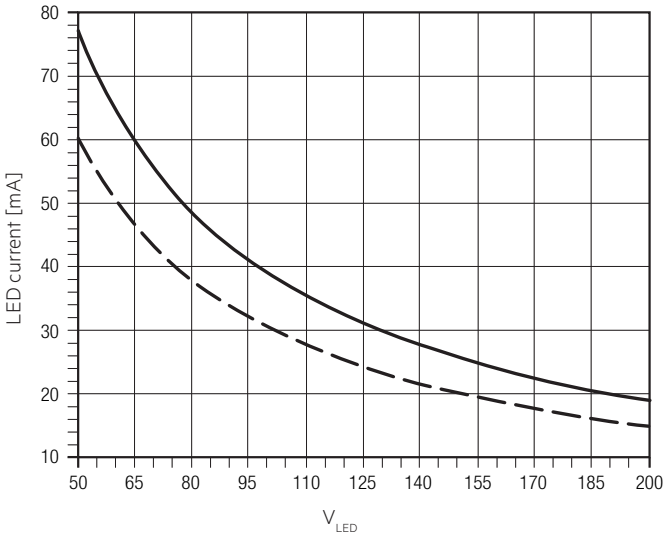

EM converterLED BASIC 105 200V
Article number: 89800309
6.0 V battery voltage
750 – 960 mA battery discharge current (tolerance)

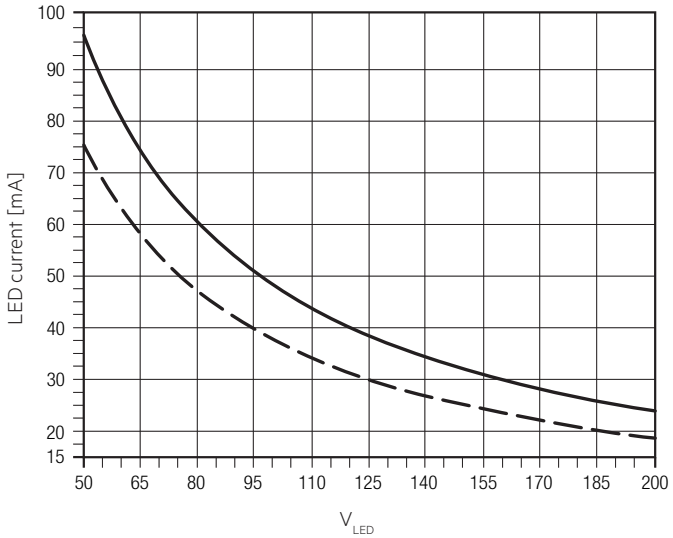

LED current at nominal battery voltage and min. battery discharge current

LED current at nominal battery voltage and max. battery discharge current

LED peak current at start in emergency mode – 4 cells

Voltage	Inrush current	Duration
52.1 V	146 mA	16.7 ms
62.0 V	134 mA	14.1 ms
74.7 V	121 mA	11.5 ms
84.8 V	111 mA	9.4 ms
100.0 V	100 mA	7.7 ms
110.1 V	94 mA	6.9 ms
122.6 V	86 mA	6.3 ms
135.1 V	81 mA	4.3 ms
145.0 V	77 mA	4.2 ms
155.8 V	73 mA	3.7 ms
168.3 V	68 mA	3.0 ms
180.8 V	57 mA	2.9 ms
190.8 V	51 mA	2.1 ms
200.6 V	36 mA	2.0 ms

LED peak current at start in emergency mode – 5 cells

Voltage	Inrush current	Duration
52.3 V	136 mA	25.7 ms
62.5 V	127 mA	18.9 ms
75.3 V	118 mA	14.9 ms
85.4 V	111 mA	12.4 ms
100.7 V	102 mA	9.6 ms
110.8 V	97 mA	8.4 ms
123.3 V	92 mA	7.6 ms
135.9 V	86 mA	6.6 ms
145.9 V	81 mA	5.8 ms
155.9 V	80 mA	5.3 ms
171.0 V	73 mA	4.4 ms
181.0 V	69 mA	3.9 ms
191.1 V	67 mA	3.2 ms
201.1 V	65 mA	3.0 ms

5.3 LED Driver compatibility

The EM converterLED emergency unit use 3 pole technology and is compatible with most LED Drivers on the market, however it is important to check that the rating of the LED Driver does not exceed the values specified below:

- The max. allowed output current rating of the associated LED Driver is 2.4 A peak (current rating of switching relays of EM converterLED)
- The max. allowed inrush current rating of the associated LED Driver is 60 A peak for 1 ms or 84 A for 255 µs (inrush current rating of switching relay of EM converterLED)
- The max. allowed output voltage of the associated LED Driver applied to the EM converterLED output is 450V (voltage withstand between adjacent contact of the single switching relay of the EM converterLED)
- The max. allowed LED load of the associated LED Driver is 150 W in operation. The load must be an LED module.

6. Functions

6.1 Duration link selection

Duration	Usage duration link
3 h	With link
1 h	Without link

Emergency lighting LED Driver supplied with duration link in 3 hours position.

The position of the link will only be read on first power up. If it is changed afterwards both the battery and mains supply must be disconnected for 10 seconds to enable the EM converterLED to read the new link position on reconnection of the battery and mains. It will lead to a false battery failure indication if the link is changed after installation without this reset.

7. Battery data

7.1 Battery selection

EM converterLED BASIC, 1 / 3 h

				Type	**EM converterLED BASIC 104 200V**		**EM converterLED BASIC 105 200V**	
				Article no.	**89800308**		**89800309**	
				Cells	**4 cells**		**5 cells**	
				Duration	**1 h**	**3 h**	**1 h**	**3 h**
Technology and capacity	Design	Number of cells	**Type**	**Article no.**	**Assignable batteries**			
NiCd 1.6 Ah Cs cells	stick	1 x 4	**Accu-NiCd C 4A**	**89899692**	•			
	stick	1 x 5	**Accu-NiCd C 5A**	**89899695**			•	
	stick + stick	2 + 2	**Accu-NiCd C 4C**	**89899694**	•			
	stick + stick	3 + 2	**Accu-NiCd C 5C**	**89899697**			•	
	side by side	4 x 1	**Accu-NiCd C 4B**	**89899693**	•			
	side by side	5 x 1	**Accu-NiCd C 5B**	**89899696**			•	
NiCd 4 Ah D cells	stick	1 x 4	**Accu-NiCd 4A 55**	**89800089**		•		
	stick	1 x 5	**Accu-NiCd 5A**	**89895973**				•
	stick + stick	2 + 2	**Accu-NiCd 4C**	**89895978**		•		
	stick + stick	3 + 2	**Accu-NiCd 5C 55**	**89800090**				•
	side by side	4 x 1	**Accu-NiCd 4B 55**	**89800385**		•		
NiMH 2.2 Ah Cs cells	stick	1 x 4	**Accu-NiMH 4A**	**28002089**	•			
	stick	1 x 5	**Accu-NiMH 5A**	**28002090**			•	
	side by side	5 x 1	**Accu-NiMH 5B**	**28002093**			•	
NiMH 4 Ah LA cells	stick	1 x 4	**Accu-NiMH 4Ah 4A CON**	**89800442**		•		
	stick + stick	2 + 2	**Accu-NiMH 4Ah 4C CON**	**89800438**		•		
	stick + stick	3 + 2	**Accu-NiMH 4Ah 5C CON**	**89800439**				•

7.2 Battery charge / discharge data

EM converterLED BASIC, 1 / 3 h

Type	**EM converterLED BASIC 104 200V**		**EM converterLED BASIC 105 200V**	
Article no.	**89800308**		**89800309**	
Cells	**4 cells**		**5 cells**	
Duration	**1 h**	**3 h**	**1 h**	**3 h**
Charging current	105 mA	210 mA	105 mA	210 mA
Discharge current	750 – 960 mA	750 – 960 mA	750 – 960 mA	750 – 960 mA

7.3 Accu-NiCd

1.6 Ah

Battery voltage/cell	1.2 V
Cell type	Cs
Case temperature range to ensure 4 years design life	+5 °C to +50 °C
Max. short term temperature (reduced life-time)	70 °C
Max. number discharge cycles	4 cycles per year plus 4 cycles during comissioning
Max. storage time	6 months

4.2 / 4.5 Ah

Battery voltage/cell	1.2 V
Cell type	D
Case temperature range to ensure 4 years design life	+5 °C to +55 °C
Max. short term temperature (reduced life-time)	70 °C
Max. number discharge cycles	4 cycles per year plus 4 cycles during comissioning
Max. storage time	6 months

7.4 Accu-NiMH

2.2 Ah

Battery voltage/cell	1.2 V
Cell type	Cs
Case temperature range to ensure 4 years design life	+5 °C to +50 °C
Max. short term temperature (reduced life-time)	70 °C
Max. number discharge cycles	4 cycles per year plus 30 cycles during comissioning
Max. storage time	6 months

4.0 Ah

Battery voltage/cell	1.2 V
Cell type	LA
Case temperature range to ensure 4 years design life	+5 °C to +40 °C
Max. short term temperature (reduced life-time)	70 °C
Max. number discharge cycles	4 cycles per year plus 30 cycles during comissioning
Max. storage time	6 months

7.5 Wiring batteries

Connection method: 4.8 x 0.5 mm spade tag welded to end of cell.

For stick packs this connection is accessible after the battery caps have been fitted.

To inhibit inverter operation disconnect the batteries by removing the connector from the battery spade tag.

For further information refer to corresponding battery datasheet.

7.6 Storage, installation and commissioning

Relevant information about storage conditions, installation and commissioning are provided in the battery datasheets.

8. Miscellaneous

8.1 Additional information

Additional technical information at www.tridonic.com → Technical Data

Guarantee conditions at www.tridonic.com → Services

Life-time declarations are informative and represent no warranty claim. No warranty if device was opened.