TRIDONIC

EM converterLED PRO NiCd/NiMH 250 V

PRO version

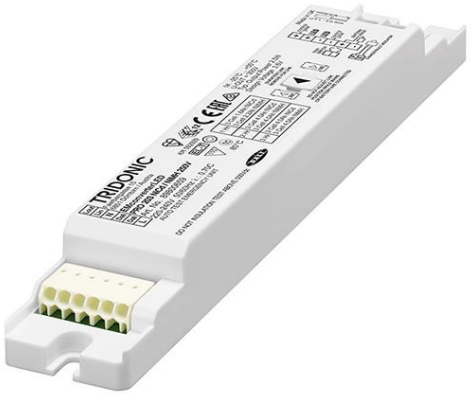

Product description
_ Self-contained emergency lighting LED driver with DALI interface
_ Non maintained operation
_ For LED modules with a forward voltage of 48 – 250 V
_ For luminaire installation
_ EM = Emergency
_ Nominal lifetime up to 100,000 h
_ 5 years guarantee (conditions at https://www.tridonic.com/manufacturer-guarantee-conditions)

Functions
_ 1, 2 or 3 h rated duration selectable with duration link
_ Constant power output
Self-test:
_ Weekly function test
_ Yearly duration test

Driver compatibility
_ 3-pole technology: 2-pole LED module changeover and delayed power switching for the LED driver
_ For further information see data sheet, LED driver compatibility

Battery management
_ Intelligent charge system
_ Deep discharge protection
_ Polarity reversal protection for battery

Batteries
_ NiCd or NiMH batteries
_ 4 year design life
_ 2 years guarantee (conditions at https://www.tridonic.com/manufacturer-guarantee-conditions)
_ For battery compatibility refer to data sheet, battery selection

Website
http://www.tridonic.com/89800659

EM converterLED PRO NiCd/NiMH 250 V

PRO version

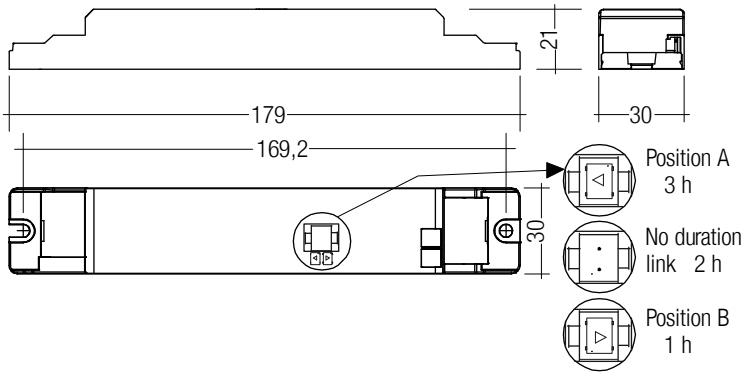

Note: Supply of control gear with duration link in 3 hours position. Duration link must be set before battery and mains connection.

Ordering data

Type	Article number	Rated duration	Packaging, carton	Packaging, pallet	Weight per pc.	Dimensions L x W x H
EM converterLED PRO 203 NiCd/NiMH 250V	**89800659**	1/2/3 h	10 pc(s).	1,600 pc(s).	0.073 kg	179 x 30 x 21 mm
EM converterLED PRO 204 NiCd/NiMH 250V	**89800660**	1/2/3 h	10 pc(s).	1,600 pc(s).	0.073 kg	179 x 30 x 21 mm
EM converterLED PRO 205 NiCd/NiMH 250V	**89800661**	1/2/3 h	10 pc(s).	1,600 pc(s).	0.073 kg	179 x 30 x 21 mm

Technical data

Rated supply voltage	220 – 240 V
AC voltage range	198 – 264 V
Mains frequency	50 / 60 Hz
Forward voltage range LED module	48 – 250 V
Output current	Refer to data sheet
Starting time	< 0.5 s from detection of emergency event
Overvoltage protection	320 V (for 48 h)
U-OUT (including open- / short-circuit and double load)	290 V
Max. open circuit voltage	290 V
Ambient temperature ta	-25 … +55 °C
Max. casing temperature tc	80 °C
Mains voltage changeover threshold	According to EN 60598-2-22
Mains surge capability (between L - N)	1 kV
Mains surge capability (between L/N - PE)	2 kV
Type of protection	IP20
Rest mode max. number of emergency units	100
Rest mode max. wiring distance	1,000 m
Functional test	Weekly 5s test
Duration test	Yearly 1 h / 2 h / 3 h test
Lifetime	up to 100,000 h
Guarantee (conditions at www.tridonic.com)	5 Year(s)
Dimensions L x W x H	179 x 30 x 21 mm

Approval marks

DALI EL-T RoHS

Standards

EN 61347-1, EN 61347-2-13, EN 61347-2-7, EN 55015, EN 61000-3-2, EN 61000-3-3, EN 61547, EN 60068-2-64, EN 60068-2-29, EN 60068-2-30, EN 62384, according to EN 50172, according to EN 60598-2-22, acc. to EN 62034

Specific technical data

Type	Rated duration	Typ. λ (at 230 V, 50 Hz)	Typ. output power P emergency	Mains current in charging operation			Mains power in charging operation		
				Initial charge	Fast recharge	Trickle charge	Initial charge	Fast recharge	Trickle charge
EM converterLED PRO 203 NiCd/NiMH 250V	1 h	0.6C	2.5 W	16 mA	18 mA	13 mA	2.1 W	2.6 W	1.9 W
EM converterLED PRO 203 NiCd/NiMH 250V	2 h	0.7C	2.5 W	20 mA	21 mA	16 mA	3.1 W	3.1 W	2.4 W
EM converterLED PRO 203 NiCd/NiMH 250V	3 h	0.7C	2.5 W	20 mA	21 mA	16 mA	3.1 W	3.1 W	2.4 W
EM converterLED PRO 204 NiCd/NiMH 250V	1 h	0.6C	3.5 W	17 mA	20 mA	14 mA	2.3 W	2.9 W	2.0 W
EM converterLED PRO 204 NiCd/NiMH 250V	2 h	0.7C	3.5 W	23 mA	24 mA	17 mA	3.6 W	3.6 W	2.6 W
EM converterLED PRO 204 NiCd/NiMH 250V	3 h	0.7C	3.5 W	23 mA	24 mA	17 mA	3.6 W	3.6 W	2.6 W
EM converterLED PRO 205 NiCd/NiMH 250V	1 h	0.6C	4.5 W	18 mA	22 mA	15 mA	2.6 W	3.2 W	2.0 W
EM converterLED PRO 205 NiCd/NiMH 250V	2 h	0.7C	4.5 W	25 mA	26 mA	18 mA	4.1 W	4.1 W	2.8 W
EM converterLED PRO 205 NiCd/NiMH 250V	3 h	0.7C	4.5 W	25 mA	26 mA	18 mA	4.1 W	4.1 W	2.8 W

EMcLED Strain-relief set 240x43x30mm

Accessory

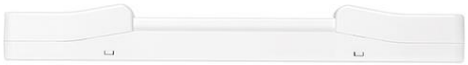

Product description

_ Optional strain-relief set for independent applications
_ Transforms the LED driver into a fully class II compatible LED driver (e.g. ceiling installation)
_ Easy and tool-free mounting to the LED driver, screwless cable-clamp channels with strain-relief (240 x 43 x 30 mm)

Website
http://www.tridonic.com/28003813

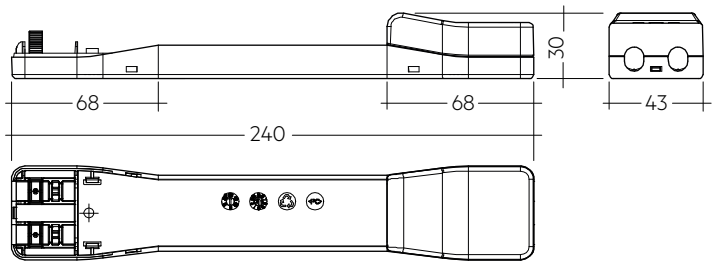

Permissible cable jacket diameter 2.2 – 9 mm

Ordering data

Type	Article number	Packaging, carton	Weight per pc.
EM cLED SR	**28003813**	10 pc(s).	0.08 kg

Approval marks

Test switch EM3

Accessory

Product description
_ For connection to the emergency lighting unit
_ For checking the device function
_ Plug connection
_ Dielectric strength: 1,500 V AC for 60 seconds

Website
http://www.tridonic.com/89899956

Ordering data

Type	Article number	Packaging, bag	Packaging, carton	Weight per pc.
Test switch EM 3	**89899956**	25 pc(s).	200 pc(s).	0.01 kg

Approval marks

RoHS

Status indication bi-colour LED EM CON

Accessory

Product description
_ Two-colour status display LED
_ Green: system OK, red: fault
_ Plug connection

Website
http://www.tridonic.com/89800273

Ordering data

Type	Article number	Packaging, bag	Packaging, carton	Weight per pc.
LED EM bi-colour, 1.0 m CON	**89800273**	25 pc(s).	200 pc(s).	0.015 kg
LED EM bi-colour, high brightness HO 1.0 m CON	**89800275**	25 pc(s).	200 pc(s).	0.015 kg
LED EM 2-colour, 0.6 m CON	**89800474**	25 pc(s).	200 pc(s).	0.009 kg
LED EM 2-colour, high brightness HO 0.6 m CON	**89800475**	25 pc(s).	200 pc(s).	0.009 kg
LED EM bi-colour, 0.3 m CON	**89800274**	25 pc(s).	200 pc(s).	0.005 kg
LED EM bi-colour, high brightness HO 0.3 m CON	**89800276**	25 pc(s).	200 pc(s).	0.005 kg

1. Standards

- EN 61347-1
- EN 61347-2-13
- EN 61347-2-7
- EN 55015
- EN 61000-3-2
- EN 61000-3-3
- EN 61547
- EN 60068-2-64
- EN 60068-2-29
- EN 60068-2-30
- EN 62384
- according to EN 50172
- according to EN 60598-2-22
- according to EN 62034

Meaning of marking ◎
Double or reinforced insulation for built-in electronic LED drivers. The control gear relies upon the luminaire enclosure for protection against accidental contact with live parts.

1.1 Glow-wire test

according to EN 61347-1 with increased temperature of 850 °C passed.

1.2 Insulation and electric strength testing of luminaires

Electronic LED-Drivers can be damaged by high voltage. This has to be considered during the routine testing of the luminaires in production.

According to IEC 60598-1 Annex Q (informative only!) or ENEC 303-Annex A, each luminaire should be submitted to an insulation test with 500 V_{DC} for 1 second. This test voltage should be connected between the interconnected phase and neutral terminals and the earth terminal. The insulation resistance must be at least 2 MΩ.

As an alternative, IEC 60598-1 Annex Q describes a test of the electrical strength with 1,500 V_{AC} (or 1,414 x 1,500 V_{DC}). To avoid damage to the electronic devices this test **must not be conducted**.

2. Thermal details and lifetime

2.1 Lifetime

Average lifetime 50,000 hours under rated conditions with a failure rate of less than 10 %. Average failure rate of 0.2 % per 1000 operating hours.

Expected lifetime					
EM converterLED PRO 203	tc	65 °C	70 °C	75 °C	80 °C
NiCd/NiMH 250V	lifetime	> 100,000 h	> 100,000 h	78,000 h	55,000 h
EM converterLED PRO 204	tc	65 °C	70 °C	75 °C	80 °C
NiCd/NiMH 250V	lifetime	> 100,000 h	> 100,000 h	77,000 h	55,000 h
EM converterLED PRO 205	tc	65 °C	70 °C	75 °C	80 °C
NiCd/NiMH 250V	lifetime	> 100,000 h	> 100,000 h	74,000 h	53,000 h

The emergency lighting LED driver is designed for a lifetime stated above under reference conditions and with a failure probability of less than 10 %.

The relation of tc to ta temperature depends also on the luminaire design. If the measured tc temperature is approx. 5 K below tc max., ta temperature should be checked and eventually critical components (e.g. ELCAP) measured. Detailed information on request.

3. Installation / Wiring

3.1 Wiring diagrams

One or more LED modules with a total forward voltage of 48 to 250 V can be connected to the EM converterLED module. These LED module(s), marked with “Emergency” are operated in emergency mode from the associated battery. In normal mains mode all LED modules are operated by the mains LED driver.

EM converterLED PRO with one LED module for non-maintained emergency operation

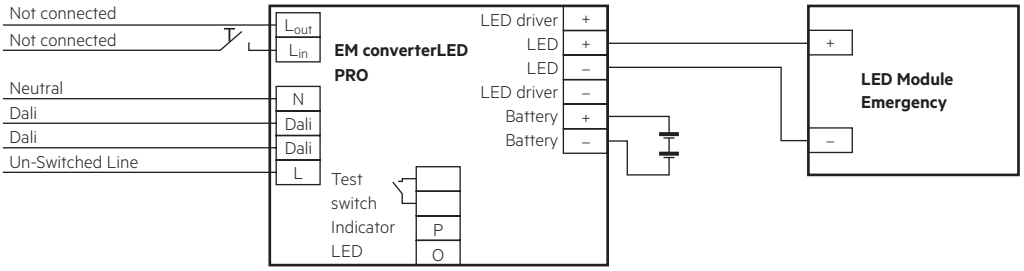

EM converterLED PRO with a standard LED driver and one LED module for mains and emergency operation

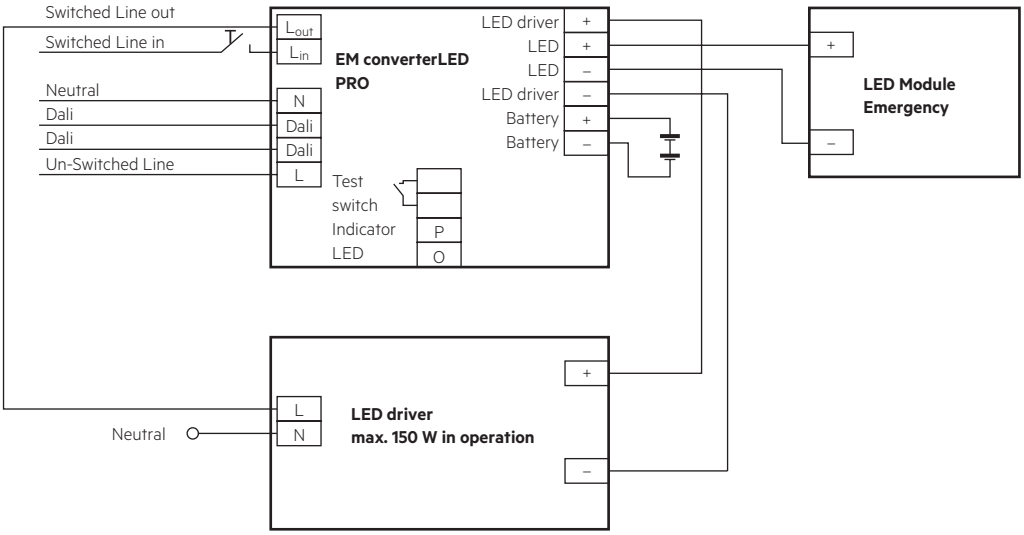

EM converterLED PRO with a standard LED driver and <u>series</u> operation of LED modules

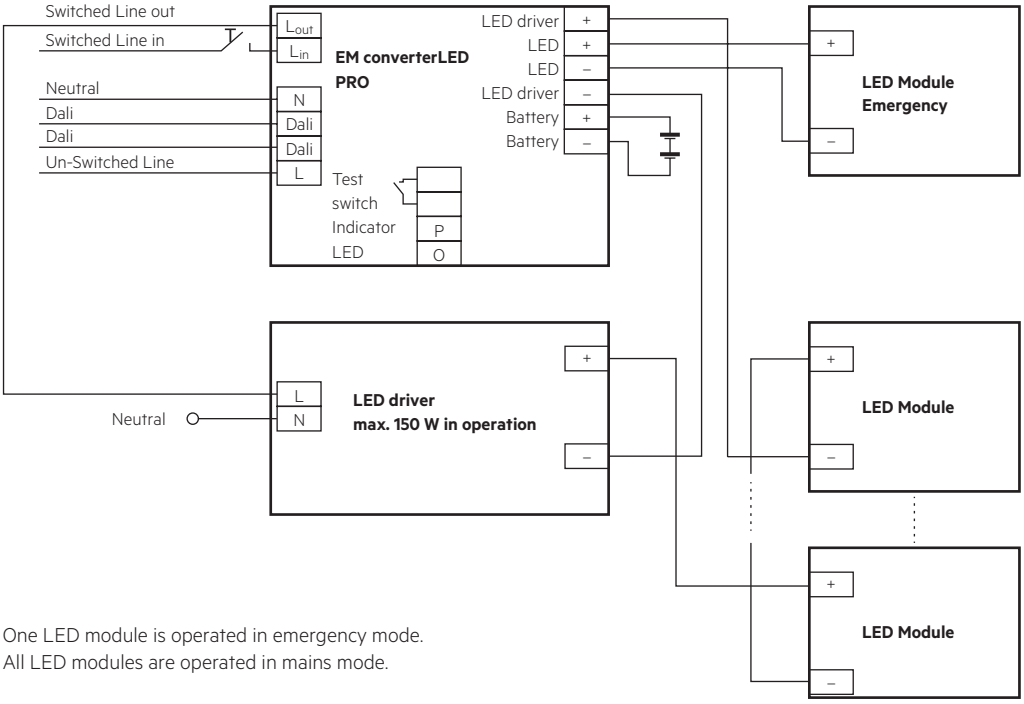

One LED module is operated in emergency mode.
All LED modules are operated in mains mode.

EM converterLED PRO with a standard LED driver and parallel operation of LED modules

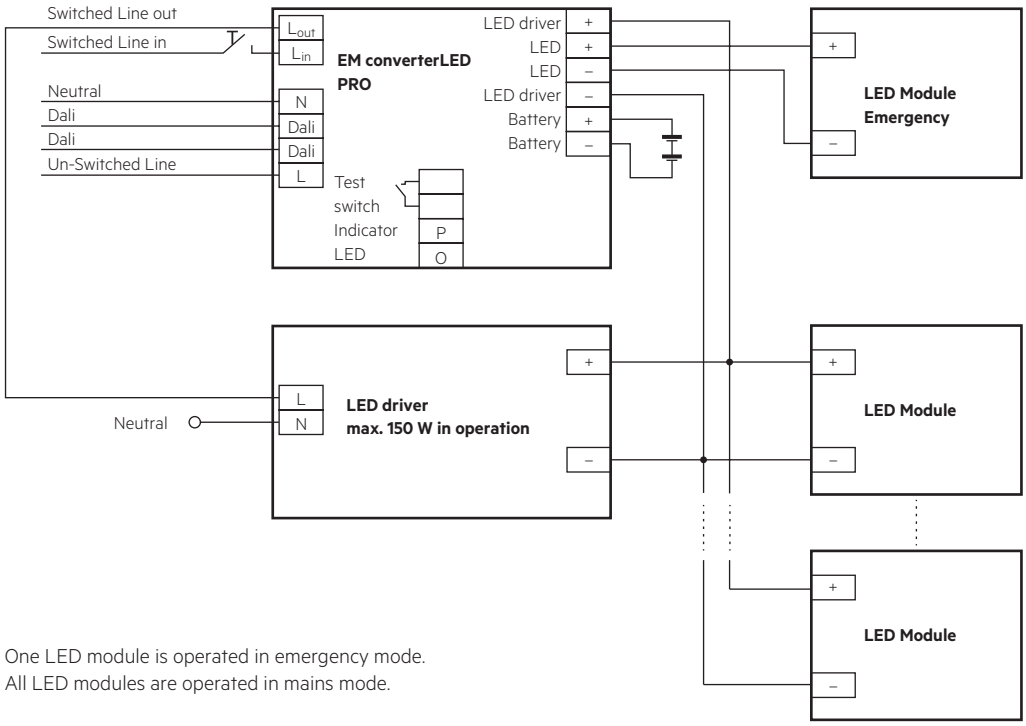

One LED module is operated in emergency mode.
All LED modules are operated in mains mode.

Wireless set-up for EM converterLED PRO with a standard LED driver and one LED module for mains and emergency operation

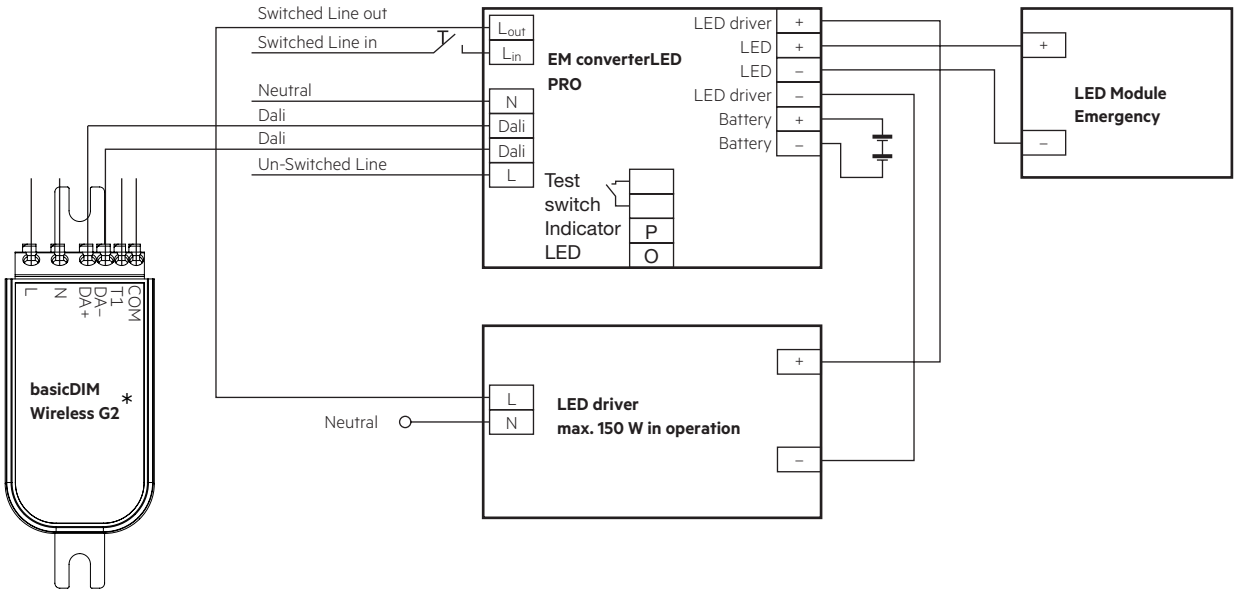

* For further information see basicDIM Wireless datasheet at www.tridonic.com

Wireless set-up for EM converterLED PRO with a DALI LED driver and one LED module for mains and emergency operation

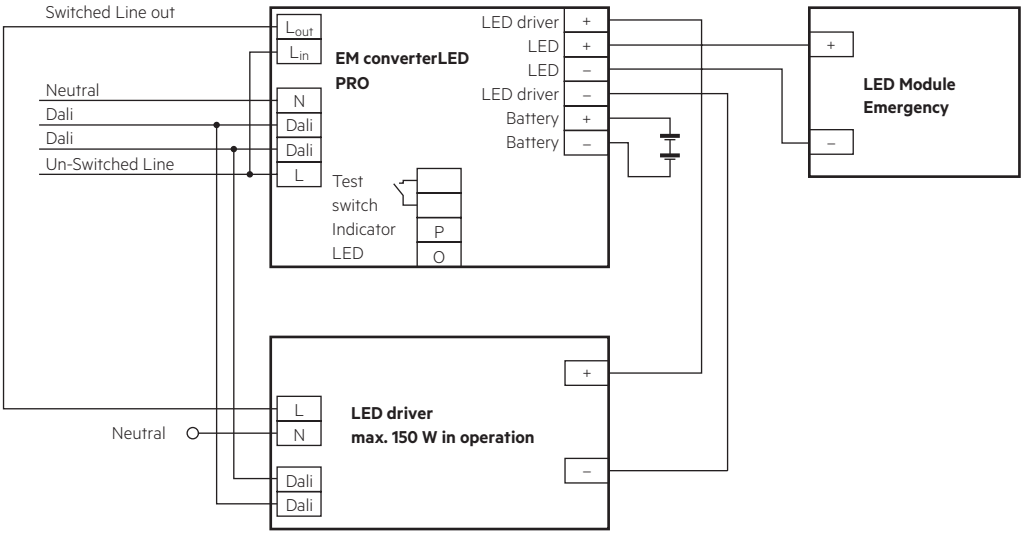

3.2 Wiring type and cross section

Solid wire with a cross section of 0.5 – 1.5 mm². Strip 8 – 9 mm of insulation from the cables to ensure perfect operation of terminals.

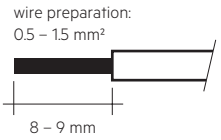

3.3 Loose wiring

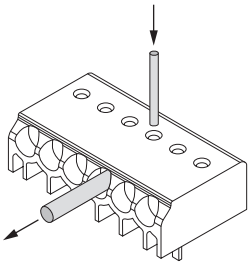

Loosen wire through twisting and pulling or using a Ø 1 mm release tool

3.4 Wiring guidelines

- The output to the LED is DC but has high frequency content, which should be considered for good EMC compliance.
- Separate LED leads from the mains and DALI connections and wiring for good EMC performance.
- Maximum lead length on the LED terminals is 3 m. For a good EMC performance keep the LED wiring as short as possible.
- Route the secondary wires (LED module) in parallel to ensure good EMC performance.
- Maximum lead length for the Test switch and Indicator LED connection is 1 m. Separate the test switch and Indicator LED wiring from the LED leads to prevent noise coupling.
- Battery leads are specified with 0.5 mm cross section and a length of 0.8 m
- DALI terminals are mains proof.
- Protect the wiring against short circuits to earth (sharp edged metal parts, metal cable clips, louver, etc.) to avoid the damage of the control gear.

To ensure that a luminaire containing LED emergency units complies with EN 55015 for radio frequency conducted interference in both normal and emergency mode it is essential to follow good practice in the wiring layout.

Within the luminaire route the switched and unswitched 50 Hz supply wiring as short as possible and keep it as far away as possible from the LED leads. Through wiring may affect the EMC performance of the luminaire.

Do not exceed the max. length of LED leads to the LED module. Note that the length of the EM converterLED leads to the LED module is added to the length of the leads from the LED driver to the EM converterLED module when considering the max. permitted lead length of the LED driver.

3.5 Maximum lead length

LED	3 m[①]
Status indication LED	1 m
Batteries	1 m

[①] Note: The length of LED leads to the LED module must not be exceeded. Note that the length of the EM converterLED leads is added to the length of the leads from the LED driver to the EM converterLED module when considering max. permitted lead length of the LED driver. Leads should always be kept as short as possible.

3.6 Use of different phases

The use of different phases for switched line and unswitched line is allowed. When using different phases, the unswitched line must fail if the switched line fails. This is required to assure correct switching into emergency mode. It can be realised with a relay.

4. Mechanical values

4.1 Housing properties

- Casing manufactured from polycarbonate.
- Type of protection: IP20

4.2 Mechanical data accessories

LED status indicator
- Bi-colour
- Mounting hole 6.5 mm diameter, 1 – 1.6 mm thickness
- Lead length 0.3 m / 1.0 m
- Insulation rating: 90 °C
- Plug connection

Test switch
- Mounting hole 7.0 mm diameter
- Lead length 0.55 m
- Plug connection

Battery connection
- Plug connection 0.3 m
- Extension 0.5 m

5. Electrical values

5.1 Maximum loading of automatic circuit breakers

Automatic circuit breaker type	B10	B13	B16	B20	C10	C13	C16	C20	Inrush current	
Installation Ø	1.5 mm²	1.5 mm²	1.5 mm²	2.5 mm²	1.5 mm²	1.5 mm²	1.5 mm²	2.5 mm²	I_{max}	time
EM converterLED PRO NiCd/NiMH 250V	90	130	130	130	180	260	260	260	10 A	120 µs

5.2 Insulation matrix

	Mains	Switched Live	Battery, LED, Test switch, Indicator LED	DALI	LED driver
Mains	–	•	••	•	•
Switched Live	•	–	••	•	•
Battery, LED, Test switch, Indicator LED	••	••	–	•	•
DALI	•	•	•	–	•
LED driver	•	•	–	•	–

• Represents basic insulation

•• Represents double or reinforced insulation

When using a non-SELV LED driver insulate the battery, LED, test switch and indicator LED in the luminaire according to the U-OUT rating of the LED driver.
DALI terminals are not SELV. Wire the terminals in accordance with the requirements of low voltage installations.

5.3 Typ. LED current/voltage characteristics

The LED current in emergency mode is automatically adjusted by the EM converterLED module based on the total forward voltage of the LED modules connected and the associated battery. The start of the LED in emergency mode does not result in a current peak.

EM converterLED PRO 203 NiCd/NiMH 250V
Article number: 89800659
3.6 V battery voltage
800 – 860 mA battery discharge current (tolerance)

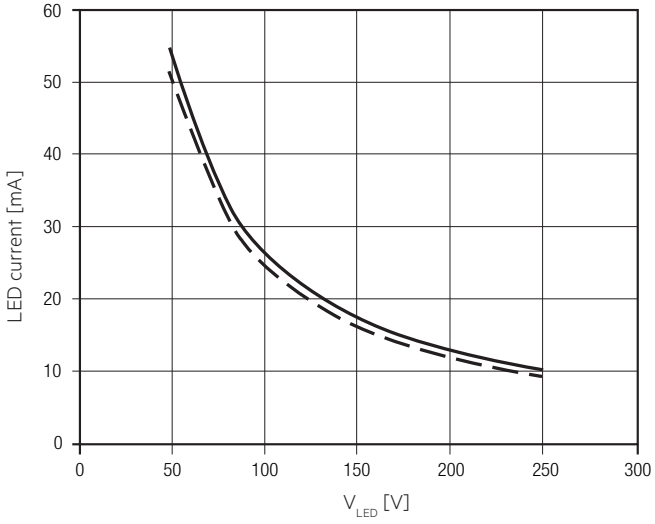

EM converterLED PRO 204 NiCd/NiMH 250V
Article number: 89800660
4.8 V battery voltage
810 – 870 mA battery discharge current (tolerance)

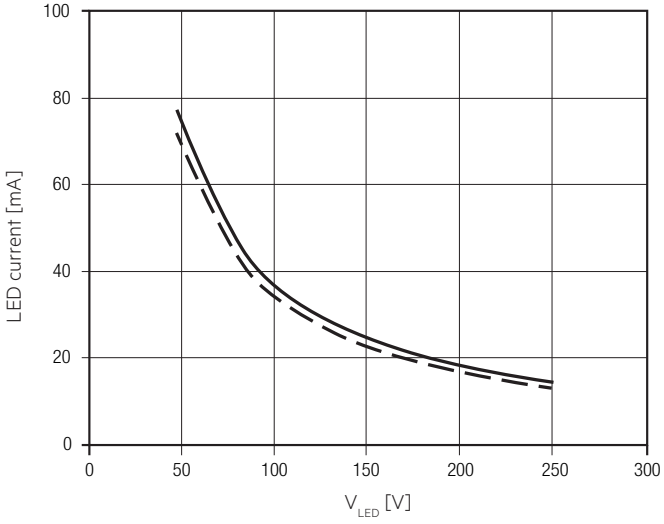

EM converterLED PRO 205 NiCd/NiMH 250V
Article number: 89800661
6.0 V battery voltage
820 – 880 mA battery discharge current (tolerance)

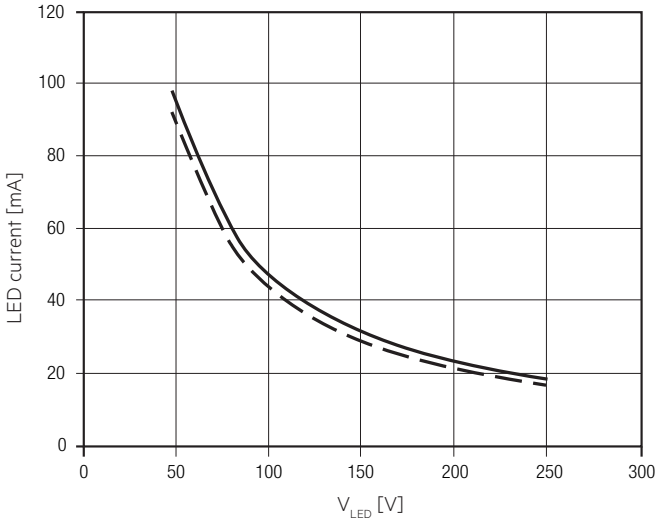

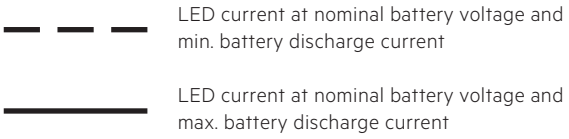

5.4 LED driver compatibility

The EM converterLED emergency unit use 3 pole technology and is compatible with most LED drivers on the market, however it is important to check that the rating of the LED driver does not exceed the values specified below:

- The max. allowed output current rating of the associated LED driver is 2 A eff (current rating of the terminals of EM converterLED) and 2.4 A peak (current rating of switching relays of EM converterLED)
- The max. allowed inrush current rating of the associated LED driver is 60 A peak for 1 ms or 84 A for 255 µs (inrush current rating of switching relay of EM converterLED)
- The max. allowed output voltage (U-OUT) of the associated LED driver applied to the EM converterLED output is 450 V (voltage withstand between adjacent contact of the single switching relay of the EM converterLED)
- The max. allowed LED load of the associated LED driver is 150 W in operation. The load must be an LED module.

6. Software / Programming / Interfaces

6.1 Software / programming

With appropriate software and interface different functions can be activated and various parameters can be configured in the LED driver. The Driver supports the following software and interfaces:

Software / hardware for configuration:
- companionSUITE (deviceGENERATOR, deviceCONFIGURATOR, deviceANALYSER)
- masterCONFIGURATOR

Interfaces for data transfer:
- Control input DALI

6.2 Control input DALI

The control input is non-polar for digital control signals (DALI).
The control signal is not SELV. The control cable has to be installed in accordance to the requirements of low voltage installations.

Digital control with:
- DALI signal: 16 bit

7. Functions

⊙ companionSUITE:
DALI-USB
The companionSUITE with deviceGENERATOR, deviceCONFIGURATOR and deviceANALYSER is available via our WEB page:
https://www.tridonic.com/com/en/products/companionsuite.asp

◈ masterCONFIGURATOR:
DALI-USB
The masterCONFIGURATOR is available via our WEB page:
https://www.tridonic.com/com/en/software-masterconfigurator.asp

Icon	Function	DALI
	OEM Identification	⊙ ◈
	OEM GTIN	⊙ ◈
	Label information	⊙ ◈
	Factory reset	⊙ ◈
	Device operating mode	⊙ ◈
	Prolong time	⊙ ◈
	Autotest	⊙ ◈
	Test window	⊙ ◈

7.1 OEM Identification

The OEM (Original Equipment Manufacturer) can set his own identification number.

7.2 OEM GTIN

The Original Equipment Manufacturer (OEM) can set his own Global Trade Item Number (GTIN).

7.3 Label information

In production, an individual label can be printed out for each device.
For this there are different default values (Batch No., Production Date, ...) available.
In addition, you can use these two text input fields to insert your own luminaire information and print it out.

- Article number (48 characters)
- Description (6 x 48 characters)

This information is not stored on the device, it is only used for the label print function in the deviceCONFIGURATOR.

7.4 Prolong time

Prolong time can be set by the DALI controller.
Here you can set how long the emergency operation will be maintained after power recovery.
The module exits the PROLONG mode as soon as the cut-off threshold of the battery voltage has been reached (total discharge protection), that is when the total operating time has been exceeded.
The default prolong time is set as 0 minutes as specified within the DALI standard.
Indicator LED will stay off for the duration of the prolong time.

7.5 Autotest

7.5.1 Functional test

The time of day and frequency of the 5 seconds function test can be set by the DALI controller. The default setting is a 5 seconds test on a weekly basis.

7.5.2 Duration test

The time of day and frequency of the duration test can be set by the DALI controller. The default setting is a duration test conducted every 52 weeks.

For 2 h operation:
The first commissioning duration test has a time of 120 minutes, subsequent through life tests are conducted for 90 minutes. When the battery is changed or disconnected and re-connected the unit will next conduct a 120 minute test.

7.6 Test window

The test window sets the maximum time between the scheduled start time or test request via DALI and the actual execution of the test.
If the test cannot be executed in the test window, the TEST EXECUTION TIMEOUT bit in the FAILURE STATUS is set.

7.7 Duration link selection

Duration	Link position
3 hr	Position A
2 hr	No duration link
1 hr	Position B

Emergency lighting LED driver supplied with duration link in 3 hours position (position A).

The position of the link will only be read on first power up. If it is changed afterwards both the battery and mains supply must be disconnected for 10 seconds to enable the EM converterLED to read the new link position on reconnection of the battery and mains. It will lead to a false battery failure indication if the link is changed after installation without this reset.

7.8 Status indication

System status is indicated by a bi-colour LED and by a DALI status flag.

LED indication	Status	Comment
Permanent green	System OK	AC mode
Fast flashing green (0,1 sec on – 0,1 sec off)	Function test underway	
Slow flashing green (1 sec on – 1 sec off)	Duration test underway	
Red LED on	Load failure	Open circuit / Short circuit / LED failure
Slow flashing red (1 sec on – 1 sec off)	Battery failure	Battery failed the duration test or function test / Battery is defect or deep discharged/ Incorrect battery voltage
Fast flashing red (0,1 sec on – 0,1 sec off)	Charging failure	Incorrect charging current
Double pulsing green	Inhibit mode	Switching into inhibit mode via controller
Binary transmission of address via green/red LED	Address identification	During address identification mode
Green and red off	DC mode	Battery operation (emergency mode)

7.9 Testing

DALI Control
A DALI command from a suitable control unit can be used to initiate function and duration tests at individually selected times. Status flags are set for report back and data logging of results.

When a DALI bus has not been connected or when a DALI bus is connected but the DALI default DELAY and INTERVAL times have not been re-set by sending appropriate DALI commands, then the EM converterLED PRO will conduct self-tests in accordance with the default times set within the EEPROM.
These default times are factory pre-set, in accordance with the DALI standard EN 62386-202, to conduct an automatic function test every 7 days and a duration test every 52 weeks. Since the DELAY time is factory pre-set to Zero, all units are tested at the same time. Test times can be changed with a command over the DALI bus.

The DELAY and INTERVAL time values must be re-set when the emergency system test times are to be scheduled by a DALI control and monitoring system.
Note that once the default values have been set to Zero, tests will only be conducted following a command from the control system. If the DALI bus is disconnected the EM converterLED PRO does not revert to self-testing mode.

Note: If the battery is connected the DALI communication is only possible after power reset.

Addressing
The EM converterLED PRO includes the EZ easy addressing system which allows addressing and identification by using the bi-colour LED in conjunction with the EM PRO addressing tool. Binary address codes given by the LED can be simply converted to the DALI addresses 0 to 63. For single handed addressing using this method it is necessary to send a broadcast ident command every 3 to 9 seconds. During this command the LEDs will be switched off and the indication LED will flash the 6 bit binary address preceded by a 3 second start indication period.

Commissioning
After installation of the luminaire and initial connection of the mains and battery supply to the EM converterLED PRO the device starts with the 20 hours initial charge followed by a 4 hours trickle charge for NiCd/NiMH batteries or with a 24 hours initial charge for LiFePO4 batteries.
Afterwards the device conducts a commissioning test for the full duration. The 20 hours recharge for NiCd/NiMH batteries or 24 hours recharge for LiFePO4 batteries occurs also with the connection of a new battery. The following automatic commissioning duration test only takes place when a battery is replaced and fully charged and the interval time is not set to zero. In case the interval time is set to zero the device expects the DALI system to request the testing.

Rest Mode / Inhibit Mode
Emergency operation is automatically started when the mains supply is switched off. If the Rest Mode is activated, the discharging of the battery will be minimized by switching off the LED output. If the Inhibit Mode has been activated before the mains supply is switched off, Rest Mode will be automatically switched on if the mains supply is switched off within 15 minutes.
Rest Mode and Inhibit Mode can be initiated by the DALI controller. The REST command has to be sent after the mains supply has been disconnected and whilst the EM converterLED PRO is in emergency operation. The INHIBIT command has to be sent while the EM converterLED PRO is supplied by mains.
After a mains reset the EM converterLED PRO exits the Rest Mode. Rest Mode and Inhibit Mode can both be disabled by sending the RE-LIGHT/ RESET INHIBIT command.

Test switch
An optional test switch can be wired to each EM converterLED.
This can be used to to:
- Initiate a 5 seconds function test: press 200 ms < T < 1 s
- Execute function test as long as switch pressed: press > 1 s
- Reset selftest timer (adjust local timing): press > 10 s

Timer reset functionality
The timer for function and duration test can be set to a particular time of the day by either pressing the test switch for longer than 10 seconds or cycling the unswitched line supply 5 times within 1 minute. The timer adjustment will enable the test start time to be defined manually at time in day when the timer was reset. It will also disable the adaptive test algorithm thereby forcing the unit to perform the test at the same time rather than it being defined by the adaptive algorithm. This function will only work provided the interval time is greater than zero (automatic test mode enabled). The factory programmed delay offset (1 – 28 days) will be loaded after the reset into the delay timer for the function and duration test in order to randomize the tests between adjacent units.

BlackBox data recording
Parameters providing information about the application and use are stored in the EM converterLED PRO. The parameters stored provide information on the mains, battery, LED output and emergency operation.
The BlackBox can be read out with the masterCONFIGURATOR and deviceANALYSER.

DALI Controller
DALI controllers and hardware/software solutions are available from Tridonic. Please refer to the Lighting controls section.

8. Battery data

8.1 Battery selection

EM converterLED, 1 / 2 / 3 h

				Type	EM converterLED PRO 203 NiCd/NiMH 250V		EM converterLED PRO 204 NiCd/NiMH 250V		EM converterLED PRO 205 NiCd/NiMH 250V	
				Article no.	89800659		89800660		89800661	
				Cells	3 cells		4 cells		5 cells	
				Duration	1 h	2 / 3 h	1 h	2 / 3 h	1 h	2 / 3 h
Technology and capacity	Design	Number of cells	**Type**	**Article no.**	**Assignable batteries**					
NiCd 4 Ah D cells	stick	1 x 3	**Accu-NiCd 3A 55**	**28002773**		•				
	stick	1 x 4	**Accu-NiCd 4A 55**	**89800089**				•		
	stick	1 x 5	**Accu-NiCd 5A 55**	**28002774**						•
	side by side	3 x 1	**Accu-NiCd 3B 55**	**89800384**		•				
	side by side	4 x 1	**Accu-NiCd 4B 55**	**89800385**				•		
	stick + stick	2 + 2	**Accu-NiCd 4C 55**	**28002775**				•		
	stick + stick	3 + 2	**Accu-NiCd 5C 55**	**89800090**						•
	remote box	1 x 3	**Pack-NiCd 3D CON**	**89800389**		•				
	remote box	1 x 4	**Pack-NiCd 4D CON**	**89800390**				•		
	remote box	1 x 5	**Pack-NiCd 5D CON**	**28001181**						•
NiMH 2.2 Ah Cs cells	stick	1 x 3	**Accu-NiMH 3A**	**28002088**	•					
	stick	1 x 4	**Accu-NiMH 4A**	**28002089**			•			
	stick	1 x 5	**Accu-NiMH 5A**	**28002090**					•	
	side by side	5 x 1	**Accu-NiMH 5B**	**28002093**					•	
NiMH 4 Ah LA cells	stick	1 x 3	**Accu-NiMH 4Ah 3A CON**	**89800441**		•				
	stick	1 x 4	**Accu-NiMH 4Ah 4A CON**	**89800442**				•		
	stick + stick	2 + 2	**Accu-NiMH 4Ah 4C CON**	**89800438**				•		
	stick + stick	2 + 3	**Accu-NiMH 4Ah 5C CON**	**89800439**						•

8.2 Battery charge / discharge data

EM converterLED, 1 / 2 / 3 h, NiMH

	Type	EM converterLED PRO 203 NiCd/NiMH 250V		EM converterLED PRO 204 NiCd/NiMH 250V		EM converterLED PRO 205 NiCd/NiMH 250V	
	Article no.	89800659		89800660		89800661	
	Duration	1 h	2 / 3 h	1 h	2 / 3 h	1 h	2 / 3 h
Battery charge time	Initial charge	20 h					
	Fast recharge	10 h	15 h	10 h	15 h	10 h	15 h
	Trickle charge	continuously					
Charging current	Initial charge	110 – 150 mA	280 – 320 mA	110 – 150 mA	280 – 320 mA	110 – 150 mA	280 – 320 mA
	Fast recharge	190 – 230 mA	310 – 350 mA	190 – 230 mA	310 – 350 mA	190 – 230 mA	310 – 350 mA
	Trickle charge	50 – 90 mA	110 – 150 mA	50 – 90 mA	110 – 150 mA	50 – 90 mA	110 – 150 mA
Discharge current		800 – 860 mA	800 – 860 mA	810 – 870 mA	810 – 870 mA	820 – 880 mA	820 – 880 mA
Charge voltage range[1]		0.9 – 1.65 V per cell					
Discharge voltage range		1.65 – 1.05 V per cell					

[1] The battery will be charged below 0.9 V. The EM converterLED will indicate a battery fault.

The emergency lighting LED driver will recharge the battery normally after running the test of 61347-2-7 CL 22.3 (abnormal operating conditions).

8.3 Accu-NiCd

4.2 / 4.5 Ah

International designation	KRMU 33/62
Battery voltage/cell	1.2 V
Cell type	D
Case temperature range to ensure 4 years design life	+5 °C to +55 °C
Max. short term battery case temperature (shorter than 1 month over the battery lifetime)	70 °C
Max. number discharge cycles	12 cycles per year plus 4 cycles during comissioning
Max. storage time	12 months

8.4 Accu-NiMH

2.2 Ah

International designation	HRMU 23/43
Battery voltage/cell	1.2 V
Cell type	Cs
Case temperature range to ensure 4 years design life	+5 °C to +50 °C
Max. short term battery case temperature (shorter than 1 month over the battery lifetime)	70 °C
Max. number discharge cycles	4 cycles per year plus 30 cycles during comissioning
Max. storage time	12 months

4.0 Ah

International designation	HRMU 19/90
Battery voltage/cell	1.2 V
Cell type	LA
Case temperature range to ensure 4 years design life	+5 °C to +45 °C
Max. short term battery case temperature (shorter than 1 month over the battery lifetime)	70 °C
Max. number discharge cycles	4 cycles per year plus 30 cycles during comissioning
Max. storage time	12 months

8.5 Accupack-NiCd

4.5 Ah

Battery voltage/cell	1.2 V
Cell type	D
Ambient temperature range to ensure 4 years design life	+5 °C to +40 °C
tc point	+45 °C
Max. short term battery case temperature (shorter than 1 month over the battery lifetime)	70 °C
Max. number discharge cycles	4 cycles per year plus 4 cycles during comissioning
Max. storage time	6 months

8.6 Accupack-NiMH

2.2 Ah

Battery voltage/cell	1.2 V
Cell type	Cs
Ambient temperature range to ensure 4 years design life	+5 °C to +35 °C
tc point	+40 °C
Max. short term battery case temperature (shorter than 1 month over the battery lifetime)	70 °C
Max. number discharge cycles	4 cycles per year plus 4 cycles during comissioning
Max. storage time	12 months

4.0 Ah

Battery voltage/cell	1.2 V
Cell type	LAL
Ambient temperature range to ensure 4 years design life	+5 °C to +35 °C
tc point	+40 °C
Max. short term battery case temperature (shorter than 1 month over the battery lifetime)	70 °C
Max. number discharge cycles	4 cycles per year plus 4 cycles during comissioning
Max. storage time	12 months

For a higher battery temperature rating for NiMH 4 Ah refer to the EM converterLED xx MH/LiFePO4 product range.

8.7 Wiring batteries

To inhibit inverter operation disconnect the batteries by removing the connection at battery side.

For further informations refer to corresponding battery datasheet.

8.8 Storage, installation and commissioning

Relevant information about storage conditions, installation and commissioning are provided in the battery datasheets.

9. Miscellaneous

9.1 Maximum number of switching cycles

EM converterLEDs are tested with 50,000 mains switching cycles of the associated LED driver.

9.2 Battery replacement

After a battery replacement and a subsequent full charge cycle (24 h) a duration test is mandatory to prove that with the new battery the rated duration is achieved.

9.3 Mains-connected transformers

The EM converterLED does not contain mains-connected windings of transformers.

9.4 Additional information

Additional technical information at www.tridonic.com → Technical Data

Lifetime declarations are informative and represent no warranty claim.
No warranty if device was opened.