TRIDONIC

## basicDIM ILD G2 10DPI WH

Compact control module with ambient light sensor and motion sensor

**Product description**

_ For up to 64 DALI drivers, expandable with DALI-2 Input Devices (see data sheet 3.1 Wiring)
_ Integrated application controller
_ Flexible configuration via companionSUITE
_ 2 DALI groups with adjustable offset
_ Monitoring of ambient light and motion detection
_ Infrared remote control for configuration and operation
_ Power supply via DALI line
_ Shutter for preventing occupancy detection in one direction included
_ Small dimensions allowing easy and inconspicuous integration in luminaries
_ For luminaires of protection class I and protection class II
_ Wide range of accessories allowing extended application range
_ 5 years guarantee (conditions at https://www.tridonic.com/manufacturer-guarantee-conditions)

**Housing properties**

_ Casing: polycarbonate, white
_ Type of protection up to IP66

**Website**

http://www.tridonic.com/28003392

TRIDONIC

## basicDIM ILD G2 10DPI WH

Compact control module with ambient light sensor and motion sensor

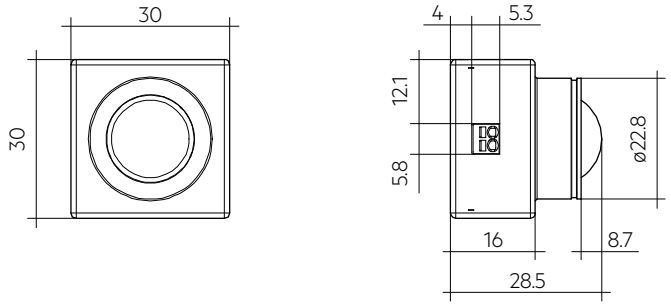


### Ordering data

| Type | Article number | Suitable for | Dimensions L x W x H | Packaging, carton | Weight per pc. |
|---|---|---|---|---|---|
| **basicDIM ILD G2 SFI 20 10DPI WH** | **28003392** | Luminaire installation | 30 x 30 x 28.5 mm | 10 pc(s). | 0.013 kg |

### Technical data

| | |
|---|---|
| Supply via | DALI cable |
| Supply voltage ① | 11.5 – 20.5 V |
| Current consumption (no LED) | max. 11 mA |
| Current consumption (with LED) | max. 12 mA |
| Mounting height | 5 – 10 m |
| Mounting hole diameter | 23 mm |
| Detection angle for PIR detection (tagential / radial) | 72° / 44° |
| Detection angle for light measurement | 30° – 40° |
| Detection range for light measurement ② | 0.5 – 2,000 lx |
| Min. temperature difference between ambient temperature and detected object | ± 4 °C |
| Ambient temperature ta | -20 … +50 °C |
| tc point | 60 °C |
| Storage temperature ts | -25 … +60 °C |
| Housing material body | PC polycarbonate |
| Housing material lens | PE polyethylene |
| Housing colour body | White (similar to RAL 9010) |
| Housing colour lens | White |
| Type of protection ③ | Up to IP66 |
| Guarantee (conditions at www.tridonic.com) | 5 Year(s) |

### Approval marks

DALI2 EAC CE UKCA RoHS

### Standards

EN 61347-2, EN 55015, EN 61000-3-2, EN 61000-3-3, EN 61547, IEC 60929

① 14 – 20.5 V if use PBI1. Uin according to IEC 62386-101.
② The measured value at the sensor head corresponds to approx. 2.5 to 10,000 lux on the surface measured.
③ Depending on the installation type up to IP66 for more details see data sheet chapter 3.7.

## Sensor mounting kit ACU 033 IP66 WH

Accessory

**Product description**

_ Easy to mount circlip lockring, compatible with industry standard circlip pliers (size 19 – 60 mm)
_ Corrosion resistant circlip made from stainless steel
_ Appealing plastic cover ring, allowing to mount the sensor in luminaires in an easy and visual attractive way
_ Fulfills the impact energy requirements of freestanding luminaires of 0.5 J
_ Includes 2 gaskets offering flexible installation in luminaries
_ Plastic cover passed glow wire test with 750 °C in according to EN 61347-1
_ In combination with the MSensor G3 SFI 30 PIR 4DPI WDA WH, a maximum of IP54 is possible
_ In combination with the basicDIM ILD G2 4DPI WDA, a maximum of IP54 is possible

**Website**
http://www.tridonic.com/28004207

**Ordering data**

| Type | Article number | Packaging, carton | Weight per pc. |
|---|---|---|---|
| **Sensor mounting kit ACU 033 IP66 WH** | **28004207** | 20 pc(s). | 0.006 kg |

## Sensor mounting kit ACU 030 IP66 WH

Accessory

**Product description**

_ Mounting ring allowing to mount the sensor into a luminaire in easy and visual attractive way
_ Including three different gaskets 3, 5 and 8 mm
_ For more details see data sheet chapter 3.5 (mounting ring) and 3.6 (gasket)
_ Mounting ring passed glow wire test with 750 °C according to EN 61347-1
_ In combination with the MSensor G3 SFI 30 PIR 4DPI WDA WH, a maximum of IP54 is possible

**Website**
http://www.tridonic.com/28002459

**Ordering data**

| Type | Article number | Packaging, carton | Weight per pc. |
|---|---|---|---|
| **Sensor mounting kit ACU 030 IP66 WH** | **28002459** | 20 pc(s). | 0.006 kg |

## REMOTECONTROL IR6

Accessory

**Product description**
_ Optional infra-red remote control
_ Switching on and off (On/Off button)
_ Dimming (Up/Down button)
_ Activation of automatic lighting control (Automatic button)
_ Setting the threshold control point (Set button)
_ IR range up to 20 m

**Website**
http://www.tridonic.com/28000647

**Ordering data**

| Type | Article number | Dimensions L x W x H | Packaging, carton | Weight per pc. |
|---|---|---|---|---|
| **REMOTECONTOL IR6** | **28000647** | 86.5 x 40.5 x 7.2 mm | 500 pc(s). | 0.019 kg |

## basicDIM ILD G2 Programmer

Accessory

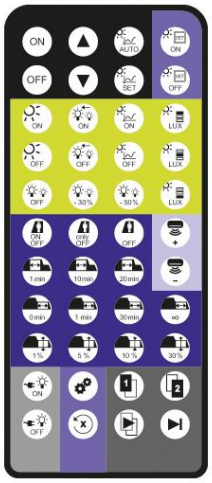

**Product description**
_ Optional infra-red programming unit for basicDIM ILD G2
_ Setting of predefined parameter values
_ Programmable functions such as light level, time delay, P.I.R., bright-out, power up and grouping
_ IR range up to 20 m

**Website**
http://www.tridonic.com/28003484

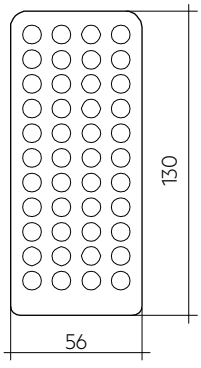

### Ordering data

| Type | Article number | Packaging, carton | Weight per pc. |
|---|---|---|---|
| **basicDIM ILD G2 PROGRAMMER** | **28003484** | 150 pc(s). | 0.04 kg |

### Approval marks

EAC CE UKCA RoHS

## Sensor housing ACU 031 IP20 WH

Accessory

MSensor G3 SSM 30 10DPI WH

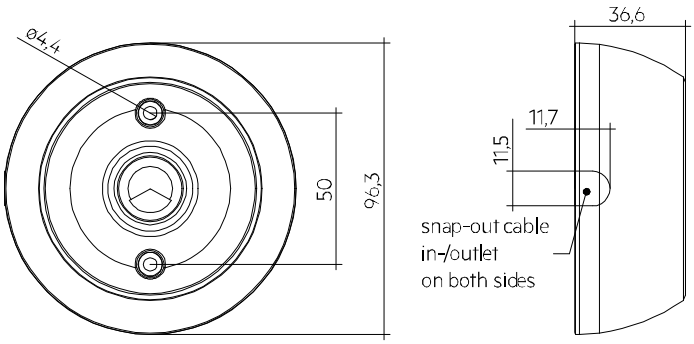


### Product description

_ Mounting frame for wired MSensor G3 SFI 30 PIR 10DPI WH sensors allowing direct mounting to the ceiling
_ Easy „click in“ installation of the sensor
_ IP20
_ Casing: polycarbonate, white
_ UV stabilized plastic
_ MSensor G3 SFI 30 PIR 10DPI WH is powered via DALI circuit
_ Mounting kit with screws and decorative plugs
_ 0.5 mm² wiring for the sensor
_ Two 3 x 1.5 mm² clamps with cable management (2 entry points on oppsite sides)
_ Including gasket for ideal IP protection
_ Casing passed glow wire test with 850 °C according to EN 61347-1

### Website

http://www.tridonic.com/28001874

### Ordering data

| Type | Article number | Packaging, carton | Weight per pc. |
|---|---|---|---|
| **Sensor housing ACU 031 IP20 WH** | **28001874** | 81 pc(s). | 0.054 kg |

## Sensor housing ACU 032 IP66 WH

Accessory

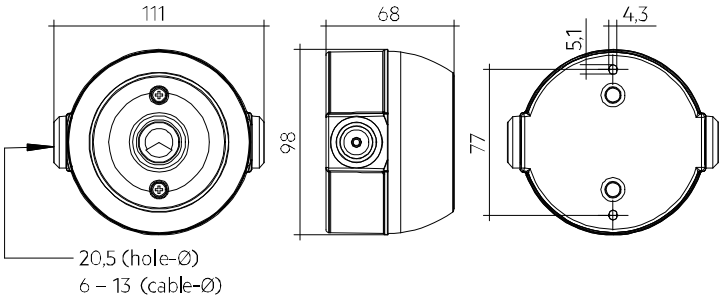


**Product description**

_ Mounting frame for wired MSensor G3 SFI 30 PIR 10DPI WH sensors allowing direct mounting to the ceiling
_ Easy „click in“ installation of the sensor
_ Housing provides IP 66, but in combination with the MSensor G3 SFI 30 PIR 4DPI WDA WH a maximum of IP54 is possible
_ Casing: polycarbonate, white
_ UV stabilized plastic
_ MSensor G3 SFI 30 PIR 10DPI WH is powered via DALI circuit
_ Optional shutter for reduction of occupancy detection area allowing to decrease the occupancy detection area from 360° to 240°
_ Mounting kit with screws and decorative plugs
_ Including gasket for ideal IP protection
_ Casing passed glow wire test with 850 °C according to EN 61347-1

**Website**
http://www.tridonic.com/28001873

**Ordering data**

| Type | Article number | Packaging, carton | Weight per pc. |
|---|---|---|---|
| **Sensor housing ACU 032 IP66 WH** | **28001873** | 26 pc(s). | 0.105 kg |

## basicDIM ILD G2 CWM 20 PBI1

Accessory

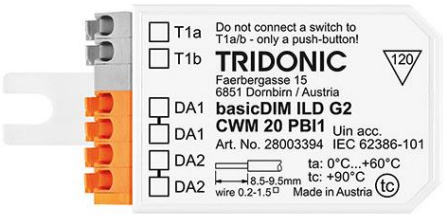


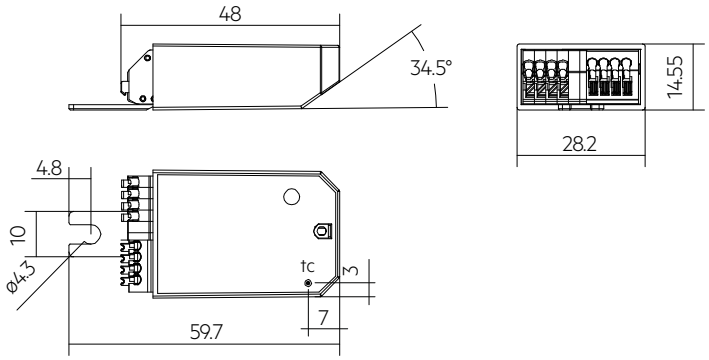


### Product description

_ Push Button Interface (PBI) for ILD G2 system
_ Flexible configuration via the ILD G2 in combination with the companionSUITE
_ Short push button action: automatic / fade off (factory default)
_ Long push button action: dim up / dim down (factory default)
_ Double push button action: set new target value for light regulation (factory default)
_ Through-wiring DA1 / DA2 possible
_ Detachable mounting flaps, allow installation in flush-mounted boxes and luminaires

### Note

_ A permanent short circuit between T1a and T1b results in limited function
_ Only push buttons can be used

### Website

http://www.tridonic.com/28003394

### Ordering data

| Type | Article number | Packaging, carton | Weight per pc. |
|---|---|---|---|
| **basicDIM ILD G2 CWM 20 PBI1** | **28003394** | 15 pc(s). | 0.012 kg |

### Approval marks

EAC CE RoHS

## ACU 034 Z20 LEX-MR 150mm

Accessory

**Product description**

_ LEX-MR is optional accessory suporting the Zhaga 20 standard
_ Responding luminaire plug LEX-LP available from Amphenol Benelux to be specified by lighting OEM's depending on specific fixture design:
_ FLM-S23-00, FLM-S23-W0
_ P-FLM-S21-00, P-FLM-S21-W0
_ Further information:
https://www.zhagastandard.org/products.html, product (zhagastandard.org) and supplier information:
https://www.amphenol-cs.com/product-series/zhaga-book-20-compliant-flm.html

**Interfaces**

_ Supplies Zhaga Book 20

**Website**

http://www.tridonic.com/28004616

**Ordering data**

| Type | Article number | Packaging, bag | Packaging, carton | Weight per pc. |
|---|---|---|---|---|
| **ACU 034 Z20 LEX-MR 150mm** | **28004616** | 100 pc(s). | 1 pc(s). | 0.002 kg |

## 1. Standards

EN/IEC 61347-2-11:2001
EN 55015:2013
EN 61000-3-2:2014 Part 3-2
EN 61000-3-3:2013 Part 3-3
EN 61547:2009

### 1.1 DALI standard

The basicDIM ILD G2 is designed to control control gear with DALI standard IEC 60929 (DALI V0), IEC 62386 (DALI V1/DALI-2).

### 1.2 Glow wire test

according to EN 61347-2-11 passed for temperatures up to 850°C.

## 2. Common

The basicDIM ILD G2 provides the basis for an easy-to-use and cost-effective
lighting system with motion detection.
When the sensor detects movement it triggers a individual adjustable motion detection profile in the control unit.
As the amount of natural ambient light changes the illuminance from the artificial lighting system is adjusted.
The connected luminaires can be switched on and off via momentary-action switch or remote control possible.
IR is always active.

This sensor provides measurement of ambient light, motion detection via PIR sensor and IR remote control input as well as a status LED.
basicDIM ILD G2 is created for following main applications:
Medium height buildings such as

- Factory buildings
- Storage buildings and warehouses
- Corridors, passages und Garages
- In covered outdoor areas

The basicDIM ILD G2 was developed and tested exclusively for Tridonic MSensor G3, XC G3 and PBI1. The use of other sensors and push button modules can lead to errors.

## 3. Installation

- The basicDIM ILD G2 must not be connected to the mains. It is supplied directly via the DALI power supply.
- DALI is not SELV.
  The installation instructions for mains voltage therefore apply.
- Please ensure that the detection range of the sensor lies in the lighting area of the controlled luminaires.
- Please ensure that the detection ranges of the sensors do not overlap. This may have influence to the lighting control.
- When installed at a height other than the recommended installation height, the presence sensor might show different characteristics.
  When mounted at a higher level, its sensitivity is reduced.
  If mounted at a lower level, its range is reduced.
- Heaters, fans, printers and copiers located in the detection zone may cause incorrect presence detection.
- Avoid direct illumination of the light source on the sensor including housing.
- Additional IR sources can disturb the sensor.
- The maximum permissible current consumption of all components on the bus must not exceed the maximum permissible current of the connected DALI Power Supply.
- When using pre-addressed DALI components, double addressing may occur. This error can be corrected by pressing the reset button.
  Commissioning must be carried out again.
- Additional IR sources can interfere with the sensor.
- The maximum permissible current consumption of all components on the bus must not exceed the maximum permissible current of the connected DALI Power Supply.
- When using pre-addressed DALI components, double addressing may occur. This error can be corrected by pressing the reset button (basicDIM ILD G2 Programmer). The commissioning must be carried out again.

### 3.1 Wiring

**Room application:**

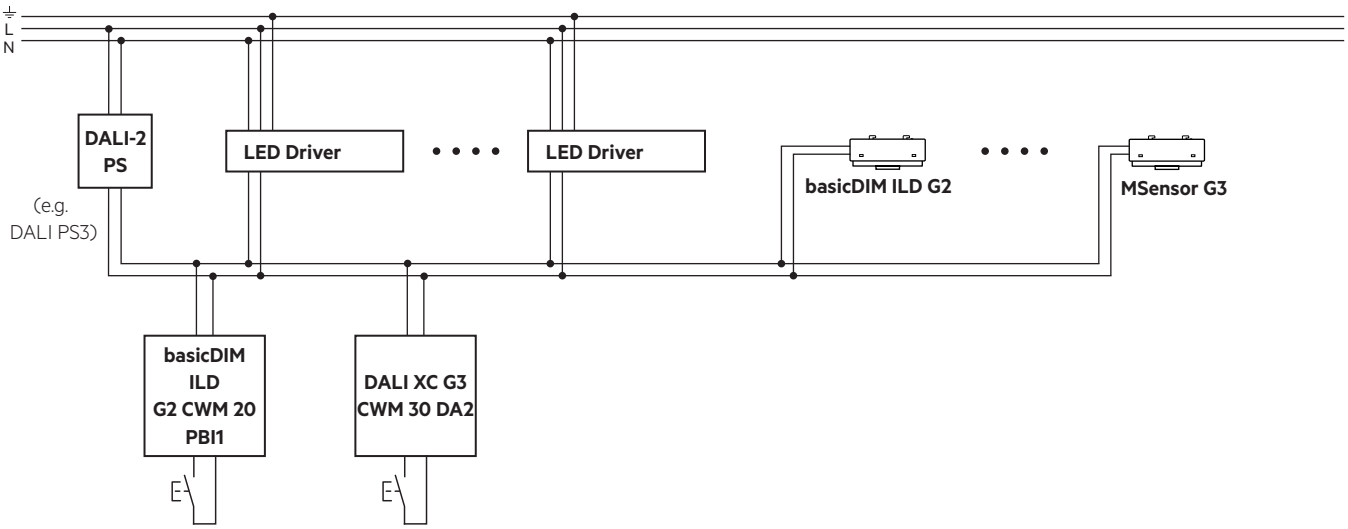


**Maximum number of connected devices:**

| Devices | Number |
|---|---|
| ILD G2 | 1 pc. |
| DALI PS | 2 pc. (max. 250 mA) |
| LED driver | 64 pcs. |
| Input devices (MSensor G3, XC G3) | 8 pcs. |
| PBI1 | 4 pcs. |

DALI repeater must not be used.

**Compatible accessories:**

- MSensor G3 as additional, slave motion detector
- XC G3 as multi channel push button interface

**Factory settings for DALI XC G3:**

| Button | Action | Factory settings |
|---|---|---|
| T1 | Short press | Automatic / Fade off |
| | Long press | Dim up / Dim down |
| | Double click | SET (store new value for constant light control) |
| T2 | Short press | Automatic |
| | Long press | not used |
| | Double click | not used |
| T3 | Short press | not used |
| | Long press | Dim up / Dim down |
| | Double click | not used |
| T4 | Short press | Automatic (switch luminaire on or change to automatic mode) |
| | Long press | not used |
| | Double click | SET (store new value for constant light control) |

**Factory settings for PBI1:**

| Button | Action | Factory settings |
|---|---|---|
| T1 | Short press | Automatic / Fade off |
| | Long press | Dim up / Dim down |
| | Double click | SET (store new value for constant light control) |

### 3.2 Wiring type and cross section

For wiring use stranded wire with ferrules from 0.2 to 0.5 mm² or solid wire from 0.14 to 0.5 mm².

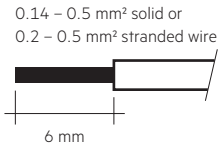


### 3.3 Mounting variants luminaire installation sensor:

3.3.1 Installation in luminaire
To ensure the right IP protection please read chapter 3.6 Gasket.

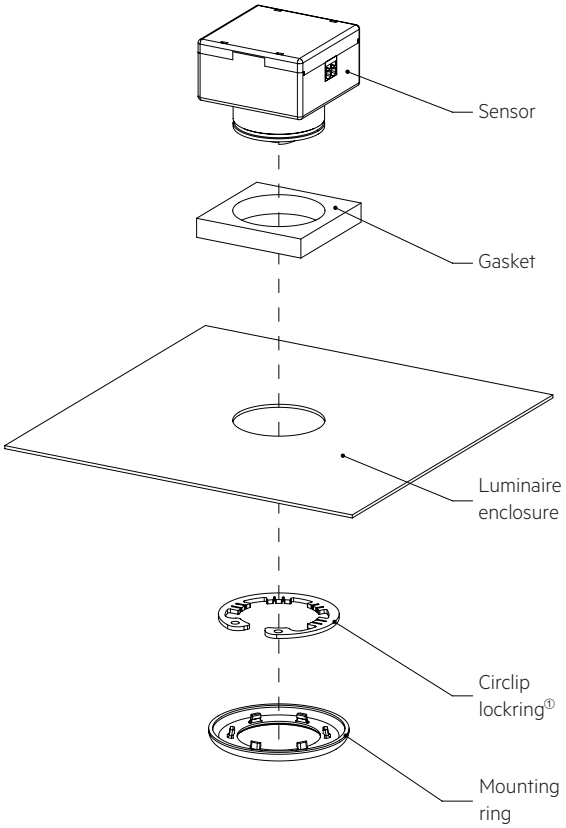


① Not included in kit ACU 030.

3.3.2 Installation in Sensor housing ACU 032 IP66 WH
To ensure the right IP protection please read chapter 3.6 Gasket.

Step 1: Cover placed on base plate

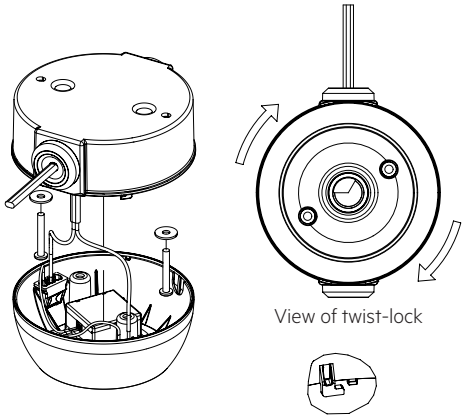


Mount base plate. Feed cable (cable diameter: 6 – 13 mm) of the lateral grommets into the installation terminals.

Step 2: Cover locked

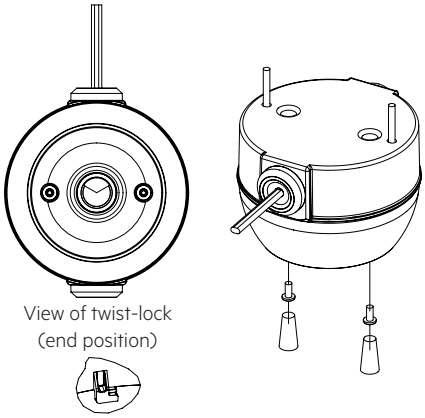


After the cover is loosely mounted on the base plate, insert and tighten the 2 screws.
In the last step insert in the sealing plugs.

3.3.3 Installation in Sensor housing ACU 031 IP20 WH
To ensure the right IP protection please read chapter 3.6 Gasket.

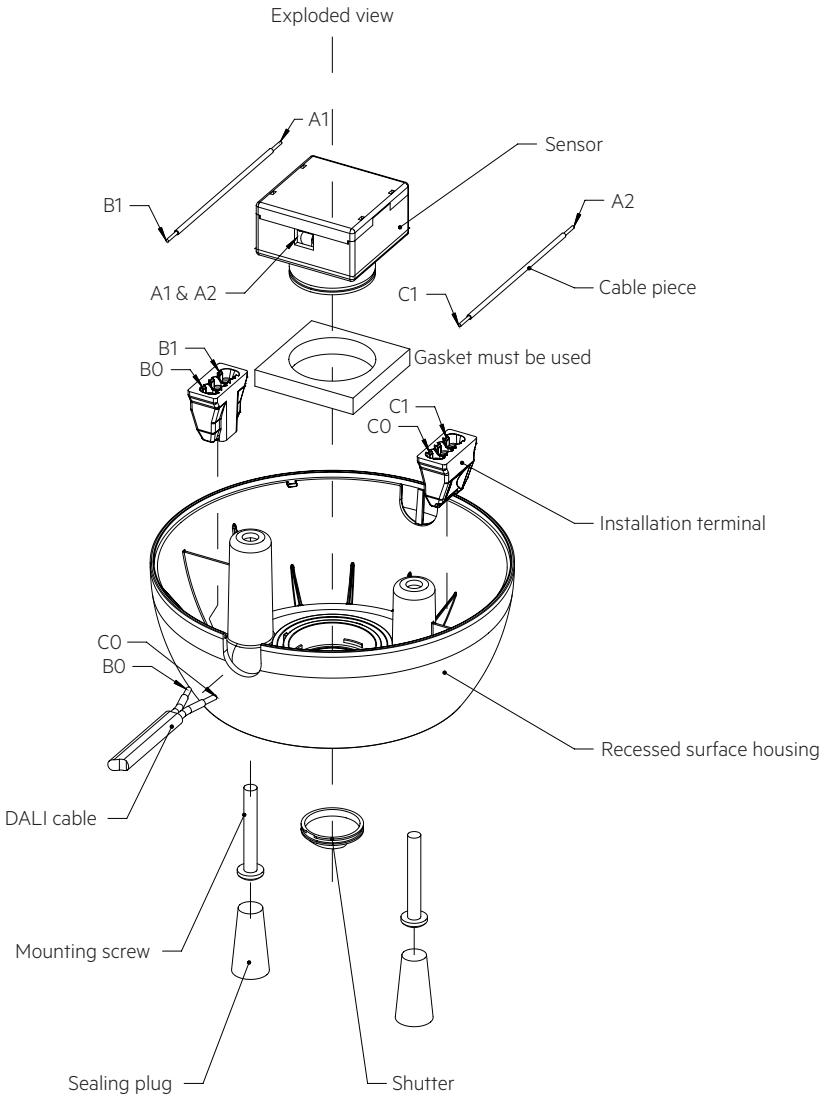


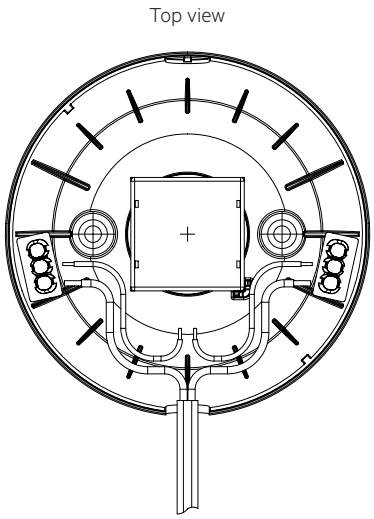

### 3.4 Detection area covers

Included in each Sensor 10DPI 23f there are two detection area covers. Each of these cover can be attached to the front of the sensor.
The 120° cover offers the possibility to reduce the detection area of PIR Sensor by 120° or 1/3 of its detection area.
There is no influence of detection area of light measurement or IR receiver by this cover.
0° cover is made only for aesthetical reasons to give the sensor a flush surface. It is not needed for proper operation of the sensor.

| | |
|---|---|
| Type of material: | PC polycarbonate |
| Colour: | transparent |
| Surface finish: | polished |

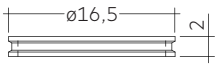


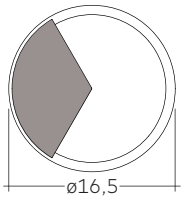


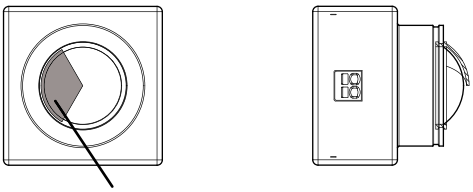

Attach the detection area cover to the sensor by inserting it into the corresponding groove at the front of the sensor.

Area which is masked by the shutter:

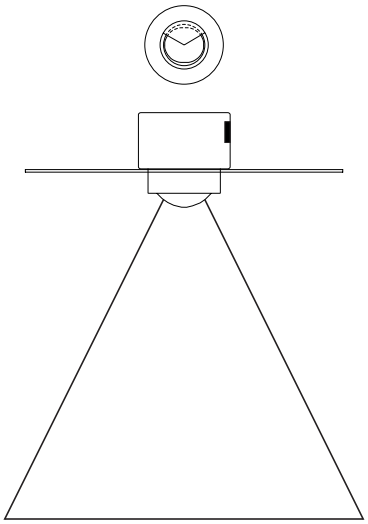

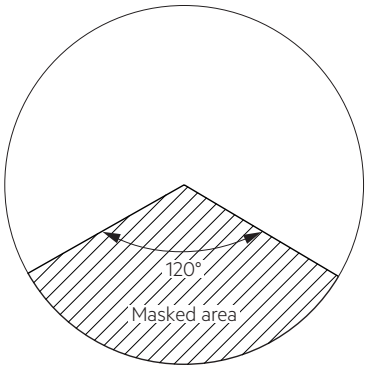


### 3.5 Mounting ring

Included in each Sensor mounting kit ACU 030 IP66 WH and kit ACU 033 IP66 WH is a mounting ring. This Ring allows to mount the sensor into a luminaire in an easy and visual attractive way.

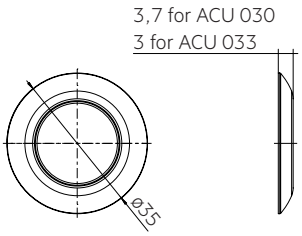

### 3.6 Gasket

To fulfill ingress protection different gaskets are included in the Mounting Kit.
The gaskets are necessary to ensure ingress protection as well as proper mounting of the sensor in luminaire.

Sensor can be inserted into luminaires with a sheet thickness from 0.75 up to 4.0 mm.

According to the size of luminaire cover in certain application, one of the gaskets must be used and mounted between the front of the sensor and the luminaire housing.
It is not allowed to use a combination of e.g. two gaskets, because this will not provide the right amount of sealing and you may run in to a risk to not reach the IP66 requirements.

Use maximum possible size for your application to ensure a proper fit and protection.

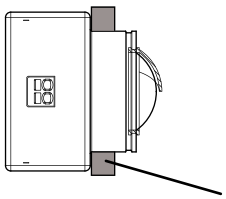

Gasket (size 3, 5 or 8 mm)

**Sensor mounting kit ACU 030 IP66 WH**

| Distance between Sensor and luminare | Final size of gasket after assembly | Use gasket |
|---|---|---|
| 2.0 – 2.4 mm | 2.0 – 2.4 mm | 3 mm |
| 2.5 – 4.0 mm | 2.5 – 4.0 mm | 5 mm |
| 4.0 – 5.9 mm | 4.0 – 5.9 mm | 8 mm |

**Sensor mounting kit ACU 033 IP66 WH**

| Distance between Sensor and luminare | Final size of gasket after assembly | Use gasket |
|---|---|---|
| 2.7 – 4.0 mm | 2.7 – 4.0 mm | 5 mm |
| 4.0 – 5.9 mm | 4.0 – 5.9 mm | 8 mm |

### 3.7 IP protecion

This device contains IP-protection to use it also in applications with the need of protection against dust and water ingress. IP66 protection applies to the front of the sensor whereas the back of the sensor is IP20 rated.

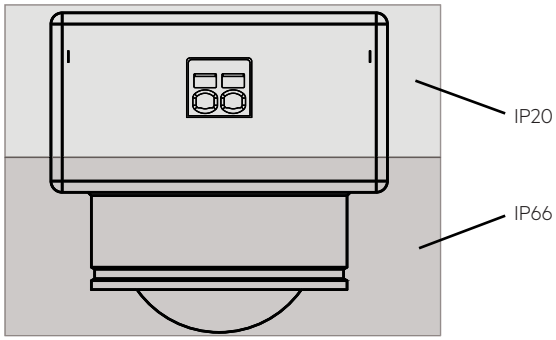


### 3.8 Mounting in class II luminaire

The Sensor provides basic insulation as required by IEC 62386-101 and defined in IEC 61347-1.
If the sensor is built in to a class II luminaire which has to provide double or reinforced insulation it has to be considered that the Sensor is not a class II device. Still the Sensor can be used for such projects as the most part of the sensor is tested to fulfil the class II requirements for double or reinforced insulation. Basic insulation is illustrated in the graphic below and covers an area 2,5 mm around the terminal.
The rest of the sensor fulfils class II requirements.

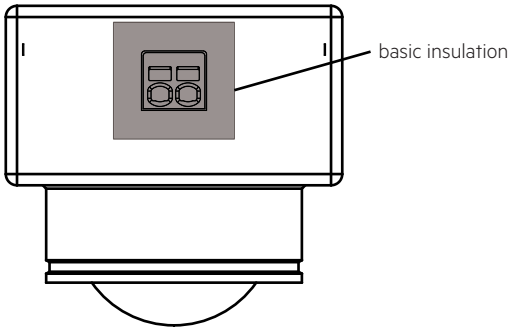

## 4. Sensor function

### 4.1 Motion detection

For motion detection PIR technology is used. PIR Lens is made to detect moving people in working areas such as warehouses, storage buildings and similar working areas with the following performance criteria:

- Ceiling height from 5 up to 10 m
- Movement of human body (increment ≥ 1.5 m), no slight motion (no sitting person)
- Movement ≥1.0 m/s for mounting heights up to 7.5 m
- Movement ≥1.5 m/s for mounting heights up to 10.0 m

### 4.2 Detection area

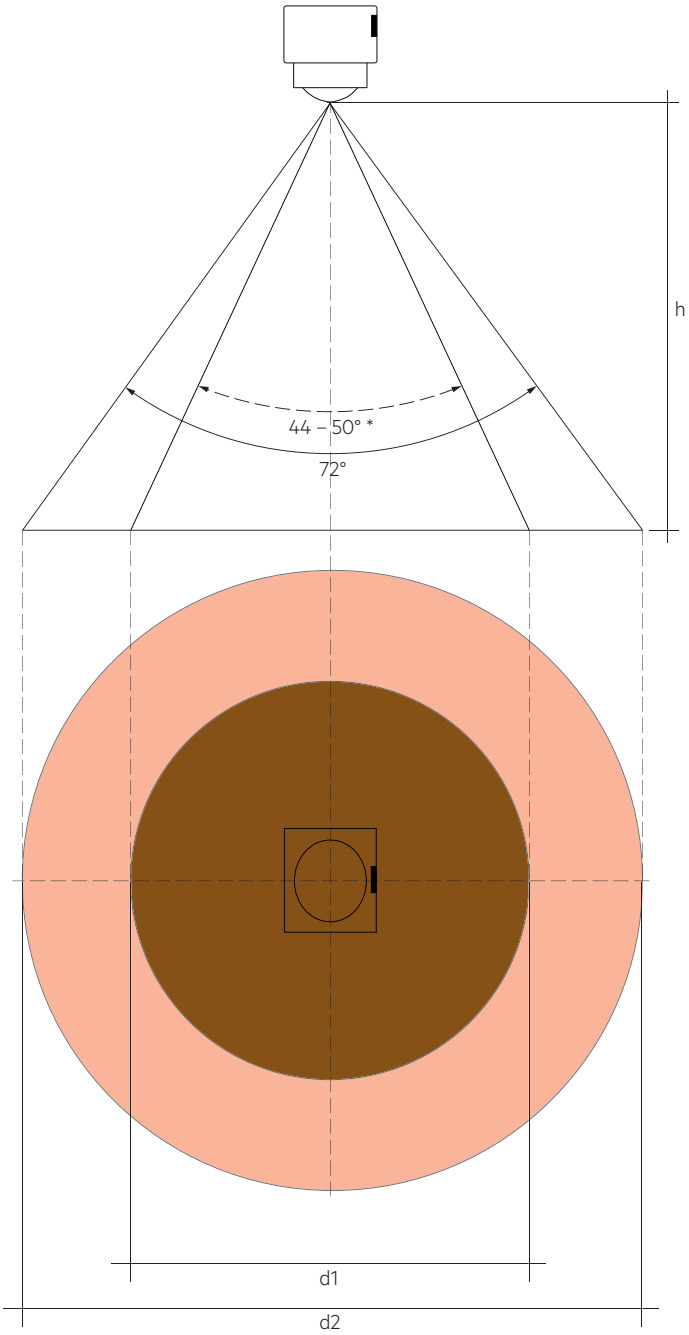


| h = Height | d1 = Radial | Radial detection angle | d2 = Tangential (72°) |
|---|---|---|---|
| 5 m | 4.6 m | 50° | 7.0 m |
| 6 m | 5.6 m | 50° | 8.4 m |
| 7 m | 6.6 m | 50° | 9.8 m |
| 8 m | 7.4 m | 50° | 11.2 m |
| 9 m | 7.2 m | 44° | 12.6 m |
| 10 m | 8.0 m | 44° | 14.0 m |

Schematic illustration of radial / tangential movements:

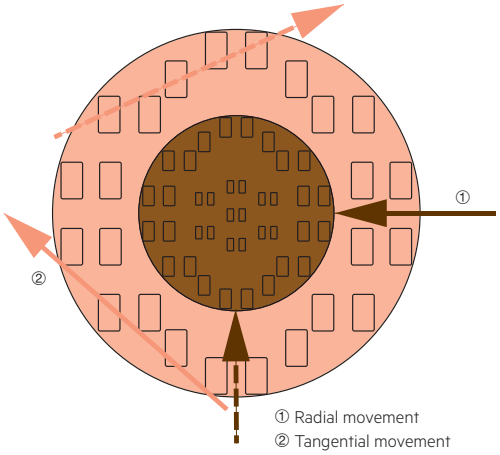


* The detection angle for the radial movement varies with the different mounting height between 44 and 50°.

The point at which the light responds must therefore not be equated with the outer detection range.

Detection example at 5 m mounting height:

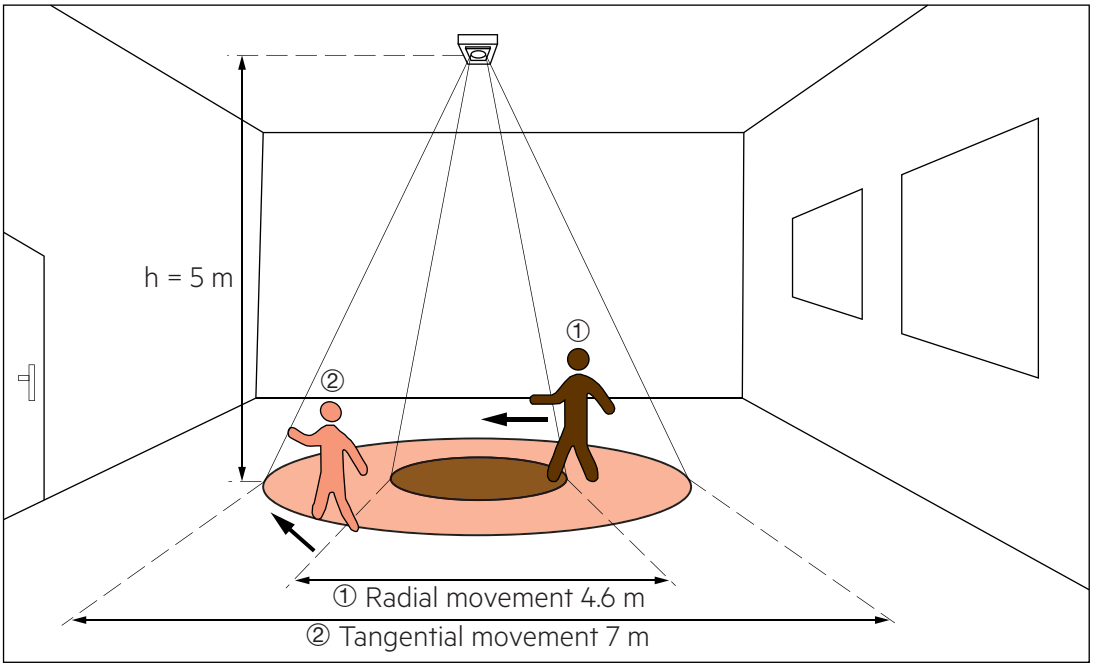


### 4.3 Light measurement

The light measurement has a cone-shaped detection area with a half angle of approximately 20° in x-direction and 15° in y-direction.

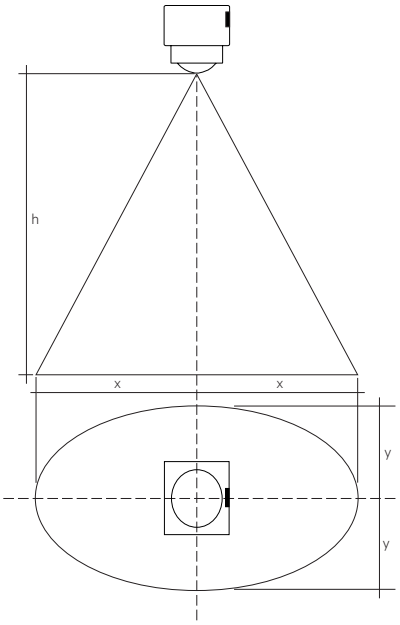


| h | dx | dy |
|---|---|---|
| 5.0 m | 3.6 m | 2.7 m |
| 7.5 m | 5.5 m | 4.0 m |
| 10.0 m | 7.2 m | 5.4 m |

The measurement range is between 0.5 and 2000 lx.
Measured at the sensor head.

### 4.4 Status LED's

The status LED is deactivated by default.
There is a LED built in to indicate different status information to the user.
This LED is controlled from the sensor itself.

To not have any influence from LED to the light measurement, LED is disabled while light sensor is measuring by default.

| Status | Pattern | Incident |
|---|---|---|
| – | – | Normal operation |
| Single red flash | 0.2 s on. all 6 s | Motion has been detected |
| Permanent red flashing | 0.2 s on. all 1 s | System error:<br>- Second basicDIM ILD G2 available<br>- Stuck button time out |
| Long green flashing | 1 s on. all 6 s | Bright-out active |
| Orange flashing | 0.5 s on. all 0.5 s | Start-up, Grouping, Test mode, Reset active application controller deactivated |
| Short blue flashing | 0.2 s | Receive infrared command from basicDIM ILD G2 Programmer or IR6 |

### 4.5 User-definable parameters

| Parameter | Range (Factory Settings) | Description |
|---|---|---|
| power-up behavior | on / off (on) | If the parameter is set to "on", the luminaire switches on after a mains break.<br>If the parameter is set to "off", the luminaire does not switch on after a mains break. |
| Presence lux level | Absence level / 1,000 lux (500 lux) | Value used by the light sensor to regulate the presence level of the luminaire.<br>On account of the room conditions and the installation height, the illuminance in the workspace may, however, be three to four times higher. |
| presence level | 1 to 100 % (100 %) | Brightness value that the ILD G2 occupies as soon as presence has been detected. |
| absence level | 1 to 100 % (1 %) | Brightness value that the ILD G2 occupies while the switch-off delay is running. |
| fade-in time | 0 to 15 (1) | Period of time starting as soon as presence is detected.<br>During fade-in time, the luminous intensity fades to the presence value.<br>1 = 0.7 s \| 2 = 1 s \| 3 = 1.4 s \| 4 = 2 s \| 5 = 2.8 s \| 6 = 4 s \| 7 = 5.7 s \| 8 = 8 s \| 9 = 11.3 s \| 10 = 16 s \| 11 = 22.6 s \| 12 = 32 s \| 13 = 45.3 s \| 14 = 64 s \| 15 = 90.5 s |
| fade time | 0 to 15 (8) | Period of time during which the luminous intensity fades from the presence value to the absence value.<br>1 = 0.7 s \| 2 = 1 s \| 3 = 1.4 s \| 4 = 2 s \| 5 = 2.8 s \| 6 = 4 s \| 7 = 5.7 s \| 8 = 8 s \| 9 = 11.3 s \| 10 = 16 s \| 11 = 22.6 s \| 12 = 32 s \| 13 = 45.3 s \| 14 = 64 s \| 15 = 90.5 s |
| run-on time | 15 s to 60 min (20 min) | Time that begins to run from the last moment that presence was detected.<br>After the run-on time the fade-off time is started.<br>If another presence is detected in the room during run-on time, the run-on time is started again. |
| switch-off delay | off / 15 s to 60 min / never OFF (off) | Time in which the absence value is held.<br>After expiration, the luminaire is either switched off or the absence value is held (never OFF). |
| fade-off time | 0 to 15 (2) | Period of time starting after the run-on time. During the fade-off time, the luminous intensity fades to off.<br>1 = 0.7 s \| 2 = 1 s \| 3 = 1.4 s \| 4 = 2 s\| 5 = 2.8 s \| 6 = 4 s \| 7 = 5.7 s \| 8 = 8 s \| 9 = 11.3 s \| 10 = 16 s \| 11 = 22.6 s \| 12 = 32 s \| 13 = 45.3 s \| 14 = 64 s \| 15 = 90.5 s |
| constant light control | on / off (on) | Enables or disables the constant light control |
| bright-out | on / off (on) | If the parameter is set to "on", the luminaire switches off as soon as the light level exceeds the bright-out threshold of the set point for longer than 10 minutes.<br>This could be the case if, for instance, the room is adequately illuminated by sunlight.<br>If the bright-out threshold falls below 100 % of the set point, the luminaire switches back on again. |
| bright-out threshold | 110 to 400 % (150 %) | Bright-out threshold used by the bright-out function |
| bright-out-off delay time | 0 to 3,600 s (600 s) | Period of time that the light level must exceed the bright-out threshold to activate bright-out. |
| group 2 offset mode | fixed / converging (converging) | This parameter specifies how the group 2 offset value behaves if the light is dimmed up.<br>If the parameter is set to "converging", the dimming level of group 2 will keep on rising even if group 1 has already reached a dimming level of 100 %. The brightness difference will be gradually reduced up to the point where both group 1 and group 2 reach the same dimming level of 100 % which effectively reduces the group 2 offset value to zero. This way, the offset will "converge".<br>If the parameter is set to "fixed", the offset is "fixed". The brightness difference between group 1 and group 2 will stay at the value defined for the group 2 offset value. If the group 2 offset value was set to e.g. 30 %, the group 2 dimming level will always stay 30 % below the dimming level of group 1. If group 1 has reached a dimming level of 100 %, the dimming level of group 2 will stop rising because otherwise the offset would be reduced to less than the defined group 2 offset value. |
| group 2 offset value | 0 to 95 % (30 %) | Adjustable brightness difference between group 2 and group 1 |

### 4.6 Possible push button configuration

| Short Press | Long Press | Double Press |
|---|---|---|
| Automatic mode | Dimming up | Set target value |
| Recall max. level | Dimming down | No function |
| Off | Dimming up / dimming down | |
| Recall max. level / off | No function | |
| On with fade | | |
| Off with fade | | |
| Automatic mode / off with fade | | |
| No function | | |

## 5. Miscellaneous

### 5.1 Disposal of equipment

Return old devices in accordance with the WEEE directive to suitable recycling facilities.

### 5.2 Additional information

Additional technical information at www.tridonic.com → Technical Data

Guarantee conditions at www.tridonic.com → Services

Lifetime declarations are informative and represent no warranty claim.
No warranty if device was opened.